OPERATOR'S MANUAL SB10X-X

INCLUDING: OPERATION, INSTALLATION & MAINTENANCE

RELEASED: 3-21-00
REVISED: 7-22-04
(REV. 02)

"SHOCK BLOCKER®"

PULSATION DAMPENER WITH "AIR TAMER" AUTO ADJUSTMENT

READ THIS MANUAL CAREFULLY BEFORE INSTALLING, OPERATING OR SERVICING THIS EQUIPMENT.

It is the responsibility of the employer to place this information in the hands of the operator. Keep for future reference.

SHOCK BLOCKER DATA

Models . . . . . see "Model Description Chart" for "-XXX-X".
Pulsation Dampener Type . . . . . Non-Metallic
Material . . . . . see "Model Description Chart".
Weight . . Glass Filled Polypropylene . 8.4 lbs (3.8 kgs)
Conductive Acetal . . . . . 8.6 lbs (3.9 kgs)
Pure Kynar . . . . . 9.0 lbs (4.1 kgs)
Maximum Fluid Inlet Pressure . . . . . 100 p.s.i.g. (6.9 bar)
Maximum Air Inlet Pressure . . . . . 100 p.s.i.g. (6.9 bar)
Maximum Fluid Volume . . . . . 57 in.^{3} (0.93 lit.)
Maximum Temperature Limits
Glass Filled Polypropylene . . . 35° to 150° F (2° to 66° C)
Conductive Acetal . . . . . 10° to 180° F (-12° to 82° C)
Pure Kynar . . . . . 10° to 200° F (-12° to 93° C)
Air Inlet . . . . . 3/8 - 18 N.P.T.F. - 1 (male)
Material Inlet . . . SB10X-AXS-X . . . . 1 - 11-1/2 N.P.T. (female)
SB10X-BXS-X . . . . 1 - 11 BSP (female)
Dimensional Data . . . . . see page 7
Kits Available
66911-1 Air Tamer Automatic Air Pressure Adjustment Kit
66108 Mounting Pedestal
66885-1 Grounding Kit (for use with model SB10D-XDS-X, includes 25' - 14 gauge wire).

GENERAL DESCRIPTION

The ARO Shock Blocker, pulsation dampener is designed to work with 1:1 ratio pumps having an outlet pressure not exceeding 100 p.s.i. (6.9 bar). The Shock Blocker will effectively reduce material pressure variations, surges and shock to piping and delivery in fluid systems during pump reversal. It can significantly contribute to pulse reduction in low pressure spray applications.

Accurate selection of wetted material will assure longest service life and minimize down time. Several material options are available for the body and bladder materials. Body materials available include: Polypropylene, Conductive Acetal and Pure Kynar. Use Conductive Acetal and ground cable when pumping flammable materials.

The Shock Blocker uses a single air pressurized, flexible bladder working against the fluid line pressure. Several bladder material options are available to allow custom matching to the fluid material for best compatibility (refer to the model description chart).

The use of an air tamer for a higher level of automatic pressure adjustment and accuracy is important. It uses a sensing rod to detect the position of the bladder and an automatic air valve to adjust the air line pressure or to exhaust excessive pressure in the bladder chamber as needed. An air pressure gauge is standard to monitor the air side internal chamber pressure.

Shock Blocker units can also be added in series to provide additional dampening on the material.

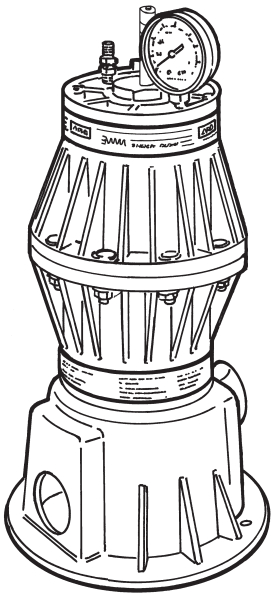

MODEL DESCRIPTION CHART

SB10 X - X X S - X

AIR SECTION MATERIAL
D – Conductive Acetal
K – PVDF (Kynar®)
P – Glass Filled Polypropylene

THREAD
A – N.P.T.
B – BSP

FLUID SECTION MATERIAL
D – Conductive Acetal
K – PVDF (Kynar)
P – Glass Filled Polypropylene

HARDWARE MATERIAL
S – Stainless Steel

BLADDER MATERIAL
A – Santoprene®
C – Hytrel®
T – T.F.E.(Teflon®)
U – Polyurethane

Shock Blocker® is a registered trademark of the ARO Corporation.

INGERSOLL-RAND COMPANY
P.O. BOX 151 • ONE ARO CENTER • BRYAN, OHIO 43506-0151
(800) 276-4658 • FAX (800) 266-7016
©2004
CCN 99877581

ARO® Ingersoll-Rand®

OPERATING AND SAFETY PRECAUTIONS

READ, UNDERSTAND AND FOLLOW THIS INFORMATION TO AVOID INJURY AND PROPERTY DAMAGE.

⚠WARNING EXPLOSION HAZARD. Do not exceed maximum fluid inlet pressure of 100 p.s.i. (6.9 bar). Operating at higher pressure can cause explosion, resulting in property damage or severe injury.

⚠WARNING USE ONLY WITH COMPRESSED AIR. Do not use bottled gas products to run the Shock Blocker. Unregulated high pressure bottled gas has the potential for over-pressurization. Certain gasses, such as Nitrogen, can cause unpredictable results. The pressure source MUST BE REGULATED.

⚠WARNING TEMPERATURE LIMITATIONS. Do not exceed maximum temperature limits of; (POLYPROPYLENE 150° F), (CONDUCTIVE ACETAL 180° F), (KYNAR 200° F). Excessive operating temperatures can weaken the body material. Limits are based on mechanical stress only.

⚠WARNING CHEMICAL COMPATIBILITY HAZARD. Do not use with certain fluids. Incompatible fluids may attack and weaken the housing, causing rupture or explosion, which can result in property damage or severe injury. For specific fluid compatibility, consult the chemical manufacturer.

⚠WARNING DISASSEMBLY HAZARD. Do not disassemble this unit when it is under pressure. Relieve all material pressure in the pumping system before attempting service or disassembly. Disconnect air lines and carefully bleed any pressure off the system. Be certain the system is not maintaining pressure due to a material restriction in the hose, line, dispensing device or the spray or extrusion tip. Failure to relieve pressure both up stream and downstream may result in an injury upon disassembly.

⚠WARNING MATERIAL ATOMIZATION. The relief / exhaust valve must be piped away from the work area. In the event of a bladder rupture, the material can be atomized and forced out the relief / exhaust valve.

⚠ CAUTION NOT FOR STRUCTURAL SUPPORT. Do not use this product to support other system components or use as a step. Improper support can result in fracture of the housing, causing damage. Plumbing must be supported to prevent stresses upon it. Install using the mounting hardware supplied.

NOTICE Replacement warning label (PN 93793) is available upon request.

⚠WARNING	**= Hazards or unsafe practices which could result in severe personal injury, death or substantial property damage.**
⚠ CAUTION	**= Hazards or unsafe practices which could result in minor personal injury, product or property damage.**
NOTICE	**= Important installation, operation or maintenance information.**

INSTALLATION INSTRUCTIONS

⚠WARNING HEED WARNINGS AS SHOWN IN "OPERATING AND SAFETY PRECAUTIONS" ABOVE.

AIR REQUIREMENTS

Clean, dry air should be used to charge the unit.

A filter capable of filtering out particles larger than 50 microns should be used on the air supply.

INSTALLATION INSTRUCTIONS

Position the Shock Blocker pulsation dampener as close to the pump discharge as possible.

Use the ground lug and optional 66885-1 grounding cable kit with the Conductive Acetal models (SB10D-XDS-X) in applications where flammable fluids are used, to help guard against static spark hazard resulting in possible fire or explosion. The terminal on the end of the ground wire must be removed and the wire stripped back 1/2" (13 mm) to be accepted by the Shock Blocker ground fitting.

Mount the Shock Blocker in one of the recommended positions as illustrated in figure 1, page 3.

Different materials affect the mounting configuration. For best performance and typical applications, mount the Shock Blocker upright versus horizontally. Heavier particles in some fluids may settle out. Gravity will help discharge heavier particles when mounted vertically.

In many situations, mounting the unit directly to the pump outlet would not be advisable due to the added weight of the unit. It should be independently mounted and plumbed using flexible tubing and not expected to physically support other components.

The material flow should be in the direction of the Shock Blocker, for best results, not passing by at right angles (see figure 1, page 3).

Use the mounting base as provided and additional mounting kit 66108 is also available to gain extra vertical height. This may be necessary when using pumps with outlets 1" and larger, because of the increased size and space requirements of the fittings. The second mounting kit is inverted to provide an elevated base (see page 7).

When connecting pipe, cut or press the "knock-out" panels from the pedestal base as needed to accommodate piping. Do not alter or cut out other parts of the pedestal.

Shock Blockers used in series should be installed as illustrated in figure 1, page 3.

All models are completely automatic, no further adjustment is needed after initial set-up. The control device is activated by changes in the material pressure and it will self-adjust the air pressure to the correct level regardless of the material used. Refer to operating instructions on page 3.

Connect the air tamer 3/8 - 18 N.P.T. air inlet to the regulated air inlet supply hose.

When pumping fluids that may pose a hazard to human health, connect a drain line to the 1/8 - 27 N.P.T. exhaust port as a safety precaution. Tubing and fittings are not supplied.

⚠WARNING In the event of a bladder rupture, the material being pumped could leak from the exhaust port. Route the drain line to a location where escaping air, material or air containing atomized material will not harm personnel or property.

OPERATION

⚠ CAUTION DO NOT EXCEED 100 P.S.I. (6.9 BAR) MAXIMUM AIR INLET PRESSURE SUPPLIED TO THE AIR INLET.

Pressure relief through the exhaust port is a normal compensating function of the control valve in the air tamer. It will automatically adjust itself to the required operating pressure once the material pressure has been applied.

NOTE: THE AIR PRESSURE SUPPLIED TO THE AIR TAMER NEEDS TO BE EQUAL TO THE MATERIAL PRESSURE TO PROVIDE THE PROPER DAMPENING EFFECT.

1. Connect a regulated air supply (100 p.s.i. / 6.9 bar maximum) to the air tamer inlet.

⚠ CAUTION AIR MUST BE SUPPLIED TO THE AIR TAMER BEFORE APPLYING FLUID PRESSURE. Failure to pressurize with air first can damage the bladder.

2. Reconnect the air supply to the pumping system.
3. Operate the pump to generate material pressure.
4. MONITOR THE GAUGE for the air pressure needed to deliver the best pulsation dampening action.
5. Operate the system a few minutes between pressure adjustments, allowing for system equalizing.

SERVICE

NOTE: BE CERTAIN TO DISCONNECT THE AIR SUPPLY AND RELIEVE FLUID PRESSURE BEFORE ATTEMPTING SERVICE OR DISASSEMBLY.

⚠ CAUTION RELIEVING AIR PRESSURE WILL NOT AFFECT THE FLUID SYSTEM PRESSURE. THE GAUGE READING COULD FALSELY REPRESENT ANY RESIDUAL FLUID PRESSURE.

TROUBLE SHOOTING

No dampening effect or erratic performance.
- Check for bladder rupture.
- Check for blocked or restricted outlet hoses.
- Check for a solid object lodged in the fluid inlet or in the bladder area.
- Check the air supply. Make certain the air pressure supply available to the tamer is equal to the fluid pressure. The air tamer will automatically adjust to the operating pressure.

Fluid or air leakage at the top.
- Check for bladder rupture.
- Check for defective pressure relief valve.
- Check for damaged (105) “O” ring.
- Check the tightness of the flange bolts (50 - 60 in. lbs / 5.6 - 6.8 Nm).

Cracks in the housing.
- Discontinue use. This would indicate possible fluid incompatibility with the Shock Blocker body material.

INSTALLATION MOUNTING CONFIGURATIONS

Installation Note: The material flow should flow directly towards the Shock Blocker, not at a right angle to the flow path.

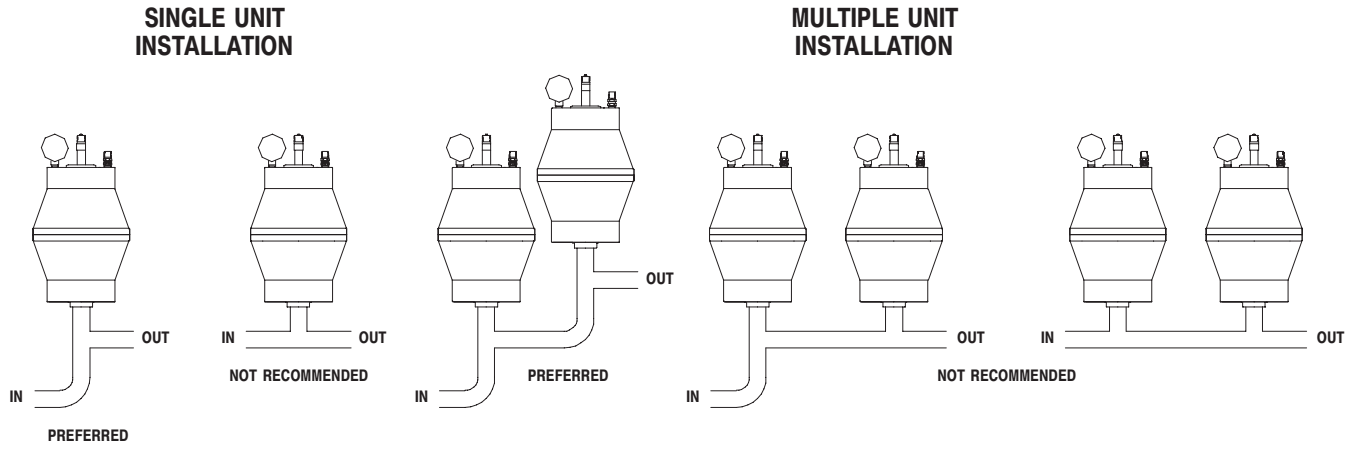

Figure 1

• Teflon® and Hytrel® are registered trademarks of the DuPont Company • Kynar® is a registered trademark of Penwalt Corp.
• Santoprene ® is a registered trademark of Monsanto Company, licensed to Advanced Elastomer Systems, L.P. • Key-Lube® is a registered trademark of Key Industries

PARTS LIST / SB10X-X

BLADDER OPTIONS

	ITEM "8"				ITEM "7"	
SB10X-XXS-X	Bladder	Qty	[Mtl]	Color	Square Ring	[Mtl]
SB10X-XXS-T	93742-4	(1)	[T]	White	93735-1	[B]
SB10X-XXS-U	93734-8	(1)	[U]	(–) White	-----	---
SB10X-XXS-A	93734-B	(1)	[SP]	(–) Green	-----	---
SB10X-XXS-C	93734-9	(1)	[H]	Cream	-----	---

(–) = Stripe

MATERIAL CODE

[B] = Nitrile
[Br] = Brass
[C] = Carbon Steel
[Co] = Copper
[GA] = Groundable Acetal
[H] = Hytrel
[N] = Neoprene
[Pe] = Polyethylene
[PK] = Pure Kynar
[PPG] = Glass filled Polypropylene
[SP] = Santoprene
[SS] = Stainless Steel
[T] = Teflon
[U] = Urethane

BODY MATERIAL OPTIONS

			GROUNDABLE SB10D-XDS-X		PURE KYNAR SB10K-XKS-X		POLYPROPYLENE SB10P-XPS-X	
Item	Description (size)	Qty	Part No.	[Mtl]	Part No.	[Mtl]	Part No.	[Mtl]
2	End Cap (Top)	(1)	92875-6	[GA]	92875-7	[PK]	92875-3	[PPG]
3	End Cap (Bottom)	(1)	93745-6	[GA]	93745-7	[PK]	93745-3	[PPG]
☐ 4	Bottom Adapter							
	models SB10X-AXS-X (1 - 11-1/2 N.P.T.)	(1)	93739-3	[GA]	93739-2	[PK]	93739-1	[PPG]
	models SB10X-BXS-X (1 - 11 BSP)	(1)	93739-6	[GA]	93739-5	[PK]	93739-4	[PPG]
5	Ground Lug	(1)	93004	[Co]	-----	---	-----	---
19	Self-Tapping Screw (1/4" - 20 x 1")	(1)	Y254-182-Z	[C]	-----	---	-----	---
20	Tube Seal (1/4" i.d. x 1-3/8" long)	(2)	93285-1-F	[N]	-----	---	93285-1-F	[N]

COMMON PARTS

Item	Description (size)	Qty	Part No.	[Mtl]
6	Screw (1/4" - 20 x 1") (see page 7)	(4)	Y254-182-Z	[C]
10	Guage (0 - 100 p.s.i. / 0 - 7 bar)	(1)	93833	---
12	Relief Valve (1/4 - 18 N.P.T.)	(1)	93368-1	[Br/B/SS]
13	Bolt (M10 x 1.5 - 6g x 45 mm)	(10)	92998	[SS]
14	Washer (13/32" i.d.)	(10)	93747-1	[SS]
15	Nut (M10 x 1.5 - 6h)	(10)	93010	[SS]
16	"O" Ring (0.140" x 1.965" o.d.)	(1)	93743-1	[T]
17	Mounting Stand (see page 7)	(1)	93744-1	[Pe]
	Air Tamer Ass'y (includes items 101 - 116)	(1)	66911-1	
101	"O" Ring (1/16" x 13/64" o.d.)	(2)	Y325-4	[B]
102	Spring	(2)	24124	[SS]
103	Stem	(1)	93741-1	[C]
104	Cylinder Assembly	(1)	66886-1	[C]

Item	Description (size)	Qty	Part No.	[Mtl]
105	"O" Ring (1/8" x 1-7/8" o.d.)	(1)	Y325-223	[B]
106	Plunger	(1)	93740-1	[C]
107	Piston	(1)	93727-1	[C]
108	Guard	(1)	92996	[SS]
109	Rod Nut	(1)	93724-1	[C]
110	Cap Screw (#6 - 32 x 3/8")	(1)	Y154-31	[C]
111	Plate	(1)	93730-1	[SS]
112	Retaining Ring	(1)	90102	[C]
113	Spring	(1)	93723-1	[SS]
114	Rod	(1)	93726-1	[C]
115	Button	(1)	93729-1	[C]
116	Bolt (1/4" - 20 x 5-1/5")	(1)	92997	[C]

66911-1 AIR TAMER ASSEMBLY

NOTE: The Shock Blocker should be supplied with air from the pump's air supply.

1. Place the assembled air tamer into the Shock Blocker while being certain to locate the (115) button in the locator boss on the (8) bladder.
2. Thread the air tamer into the end cap by hand to insure good engagement of the threads before tightening with wrench to 25 ft lbs (33.9 Nm).

☐ "Smart Parts", Keep these items on hand in addition to the service kits for fast repair and reduction of down time.

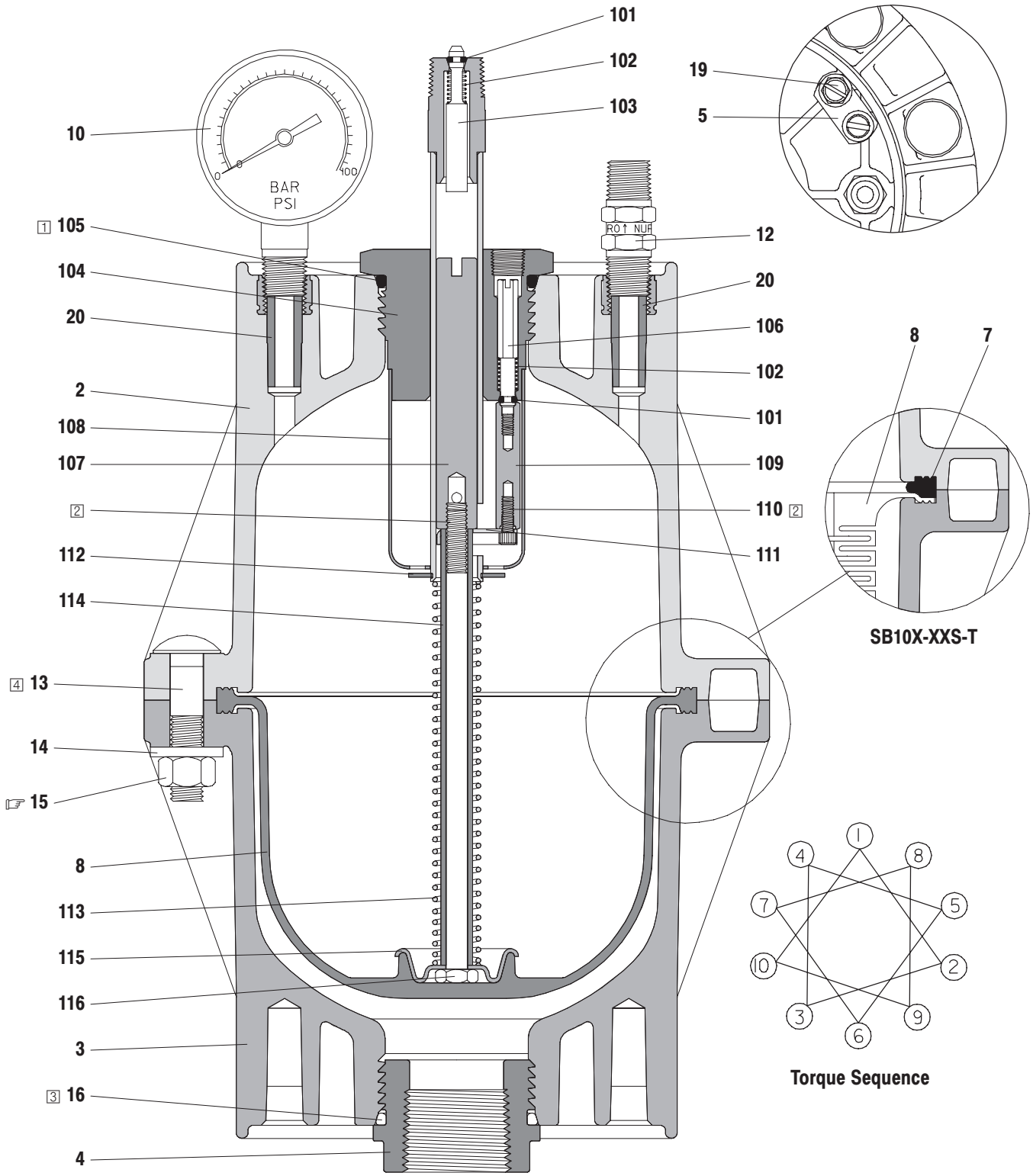

☞ Torque Requirements ☜

(15) Tighten to 50 - 60 in. lbs (5.6 - 6.8 Nm) then re-torque. Do not overtighten fasteners.

(104) Torque to 25 ft lbs (33.9 Nm).

Lubrication

1 Apply Key-Lube grease (93706-1).

2 Apply Loctite 242 to threads.

3 Apply Key-Lube grease (93706-1) if it is compatible with the fluid being pumped.

4 Apply anti-seize compound to threads.

Figure 2

1” PUMP WITHOUT SHOCK BLOCKER

(From lower chart at right)

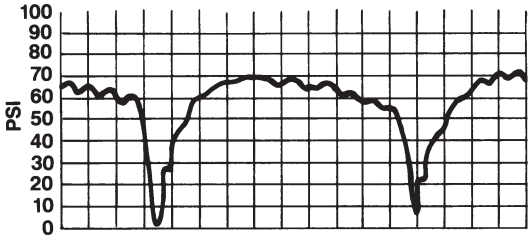

1” PUMP WITH SHOCK BLOCKER

(From lower chart at right)

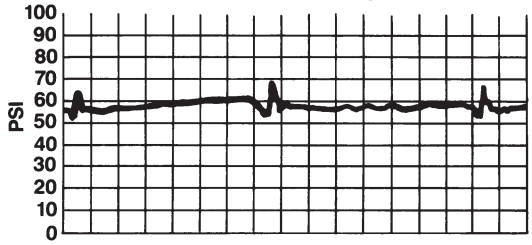

Figure 4

1/2” PUMP — % REDUCTION IN PULSATION

Fluid Pressure PSI Back Pressure	1	2	3	4	5	10	12
20	94		81			70	65
40	92		83				70
60	91		85				

Flow (G.P.M.)

1” PUMP — % REDUCTION IN PULSATION

Fluid Pressure PSI Back Pressure	1	5	10	15	20	25	30
20	90	80	70				60
40	90		75		70		
60	85		80	*	75		
80	85			80			

Flow (G.P.M.)

TYPICAL SYSTEM VIEW

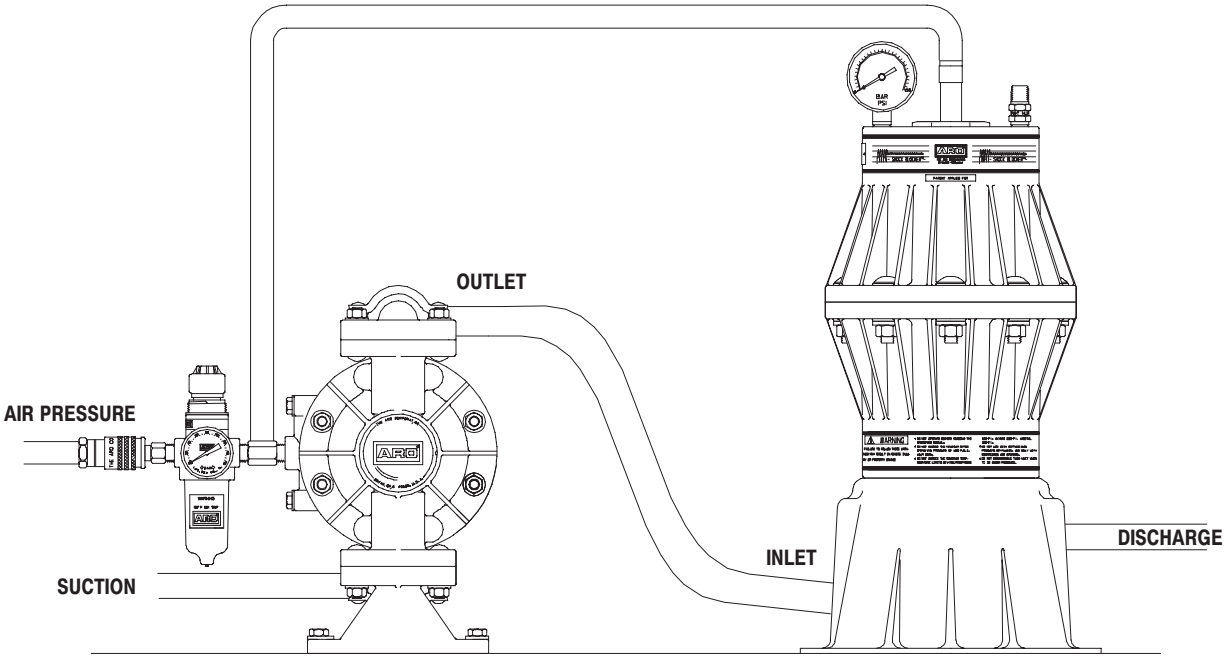

Figure 5

DIMENSIONAL DATA

All dimensions are given in inches and (millimeters).

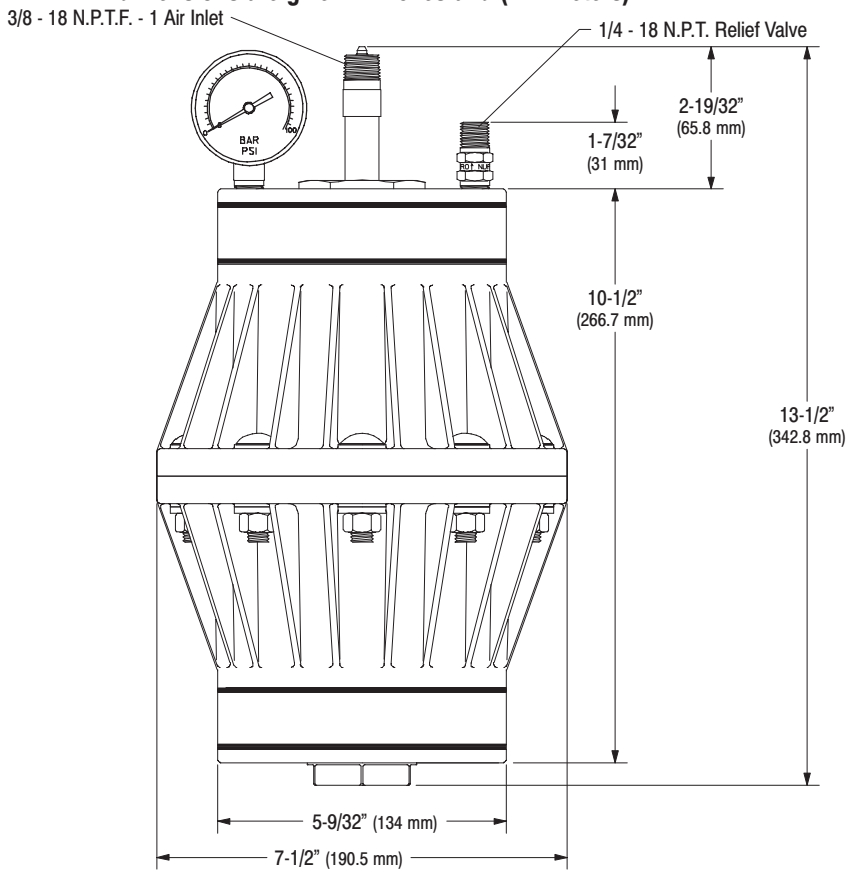

Figure 6

PEDESTAL DIMENSIONAL DATA

93744-1 Mounting Stand

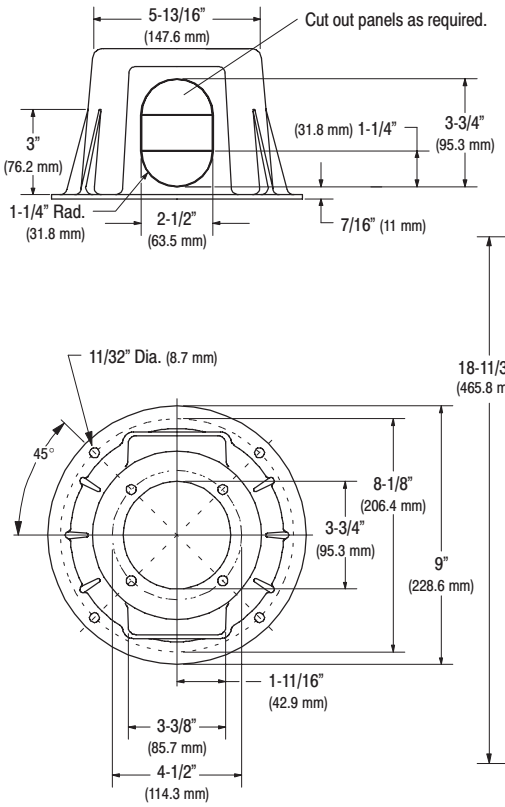

OPTIONAL 66108 PEDESTAL KIT

"A" A single pedestal (17) is included along with four (6) screws with each unit.

"B" Optional 66108 accessory pedestal kit is available separately for use with larger hoses and fittings to gain added height. The kit includes hardware.

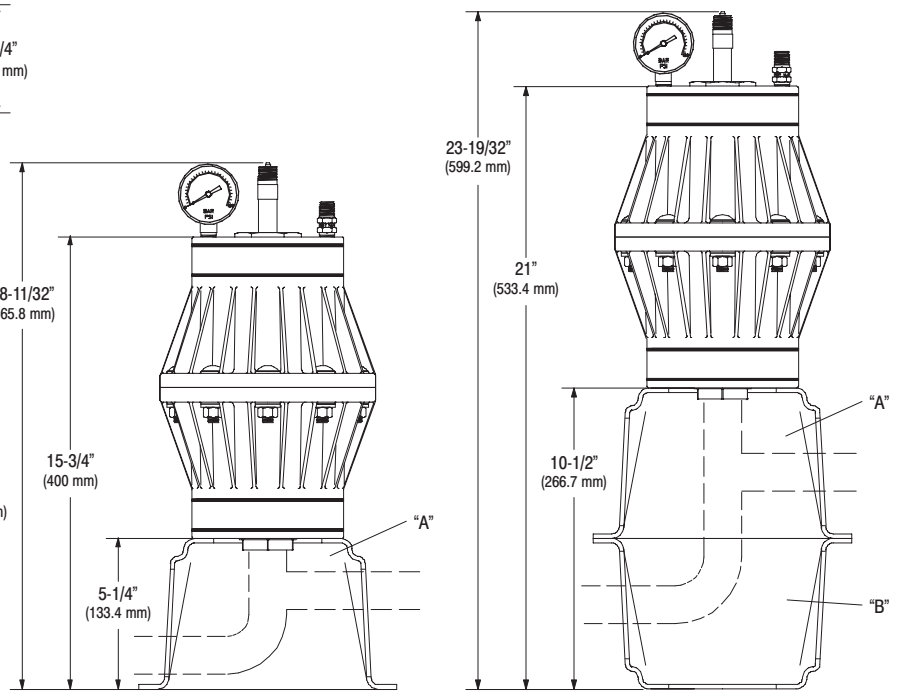

Figure 7