SALES & ENGINEERING DATA

RATIO SERIES:	65:1
FLUID P.S.I. RANGE:	1950 - 5850

650989-XXD

EXTRUSION PUMP

RELEASED: 6-21-02
REVISED:
S-1215

DIMENSIONAL DATA

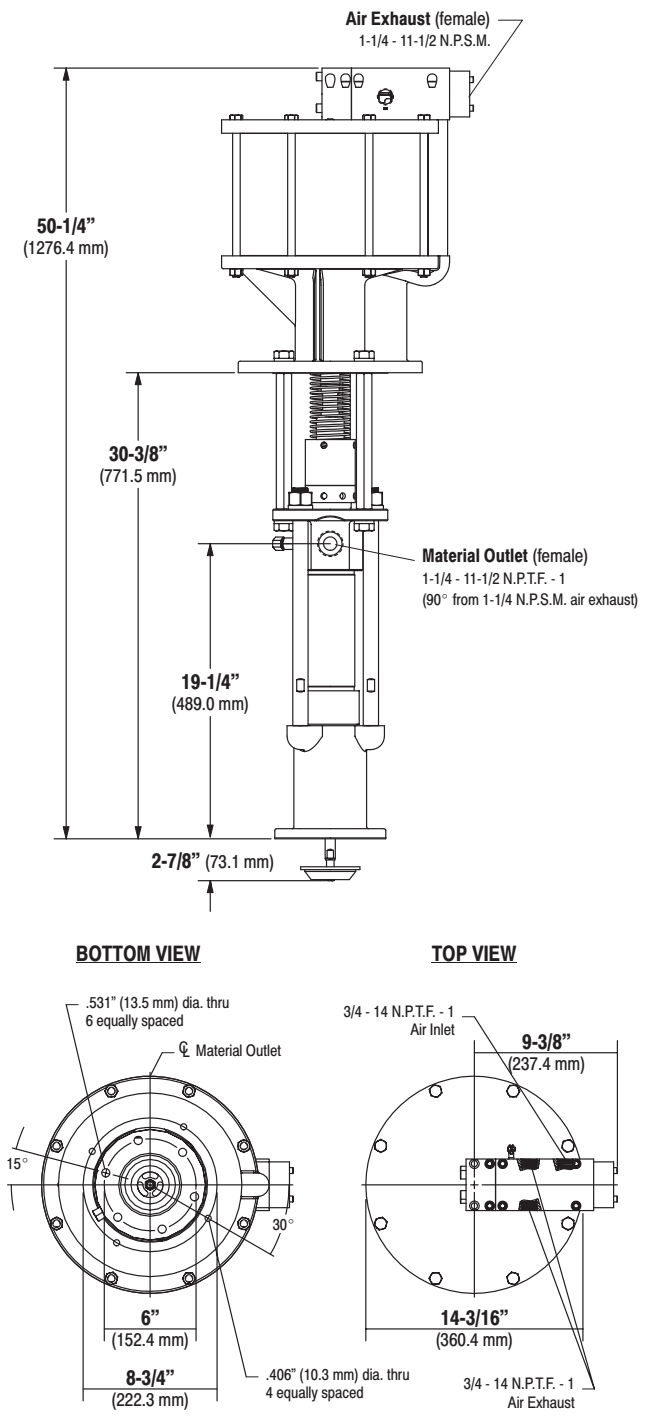

NOTE: Dimensions are shown in inches and (mm), supplied for reference only and are typically rounded up to the nearest 1/16 inch.

SPECIFICATIONS

CONSTRUCTION

Model Series (refer to option chart)	650989-XXD
Pump Type	Air Operated, Extrusion, Double Acting Pump
Ratio	65:1
Air Motor	66506-B
Motor Repair Kit	637112
Motor Diameter	12" (304.8 mm)
Stroke	6" (152.4 mm)
Air Inlet (female)	3/4 - 14 N.P.T.F. - 1
Air Exhaust (female)	1-1/4 - 11-1/2 N.P.S.M.
Lower Pump End Series	67300-XXD
Lower Pump Repair Kit	637348-XXD

Packing Options:

C - UHMW-PE
J - Polyurethane upper • UHMW-PE lower

Material Outlet (female)	1-1/4 - 11-1/2 N.P.T.F. - 1

MATERIALS OF CONSTRUCTION

Outlet Body	Carbon Steel, Nickel plated
Cylinder	Carbon Steel, Nickel Plated
Plunger	17-4 Stainless Steel, Chrome plated
Upper Check	440 Stainless Steel
Upper Seat	440 Stainless Steel
Lower Check	440 Stainless Steel
Lower Seat	440 Stainless Steel
Inlet Body	Ductile Iron, Nickel plated
Weight	165 lbs (74.8 kgs)

PERFORMANCE

Air Inlet Pressure Range	30 - 90 p.s.i. (2.1 - 6.2 bar)
Fluid Pressure Range	1950 - 5850 p.s.i. (134.5 - 403.4 bar)
Max. recommended cycles / minute	70
Displacement Per Cycle	20.0 in^3 (327.8 cm^3)
Volume / Cycle	11.08 oz. (327.6 ml)
Noise Level @ 60 p.s.i. - 40 c.p.m.	89.8 db(A)①

① Tested with 66718 Muffler installed. The pump sound pressure level has been updated to an Equivalent Continuous Sound Level (L_{Aeq}) to meet the intent of ANSI S1. 13-1971, CAGI-PNEUROP S5.1 using four microphone locations.

ACCESSORIES:

66542 Wall Mount Bracket
65139 Floor Mount
66718 Silencer

INGERSOLL-RAND COMPANY
ONE ARO CENTER • BRYAN, OHIO 43506-1100
✆ (419) 636-4242 • FAX (419) 633-1674

©2002 • PRINTED IN U.S.A.
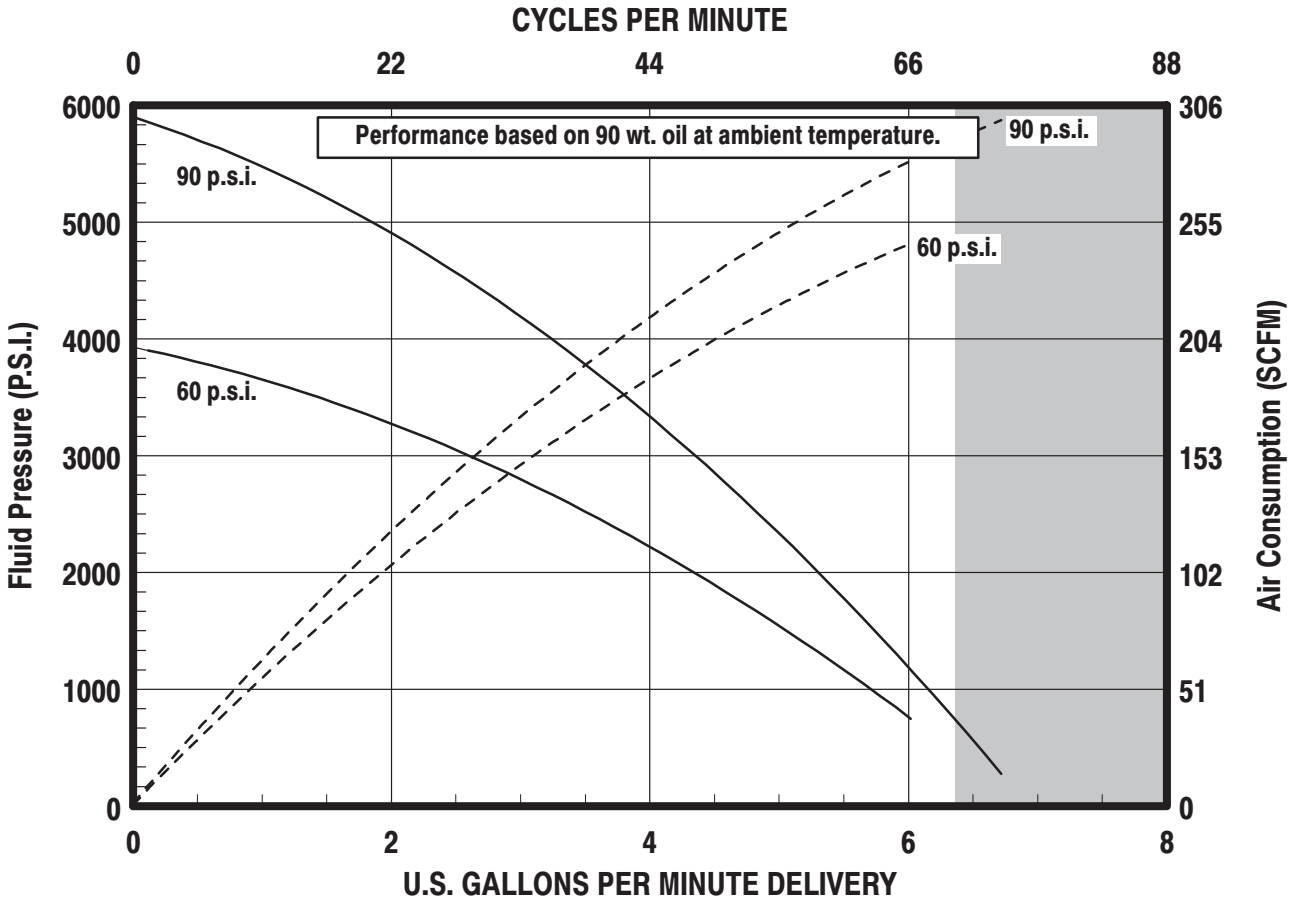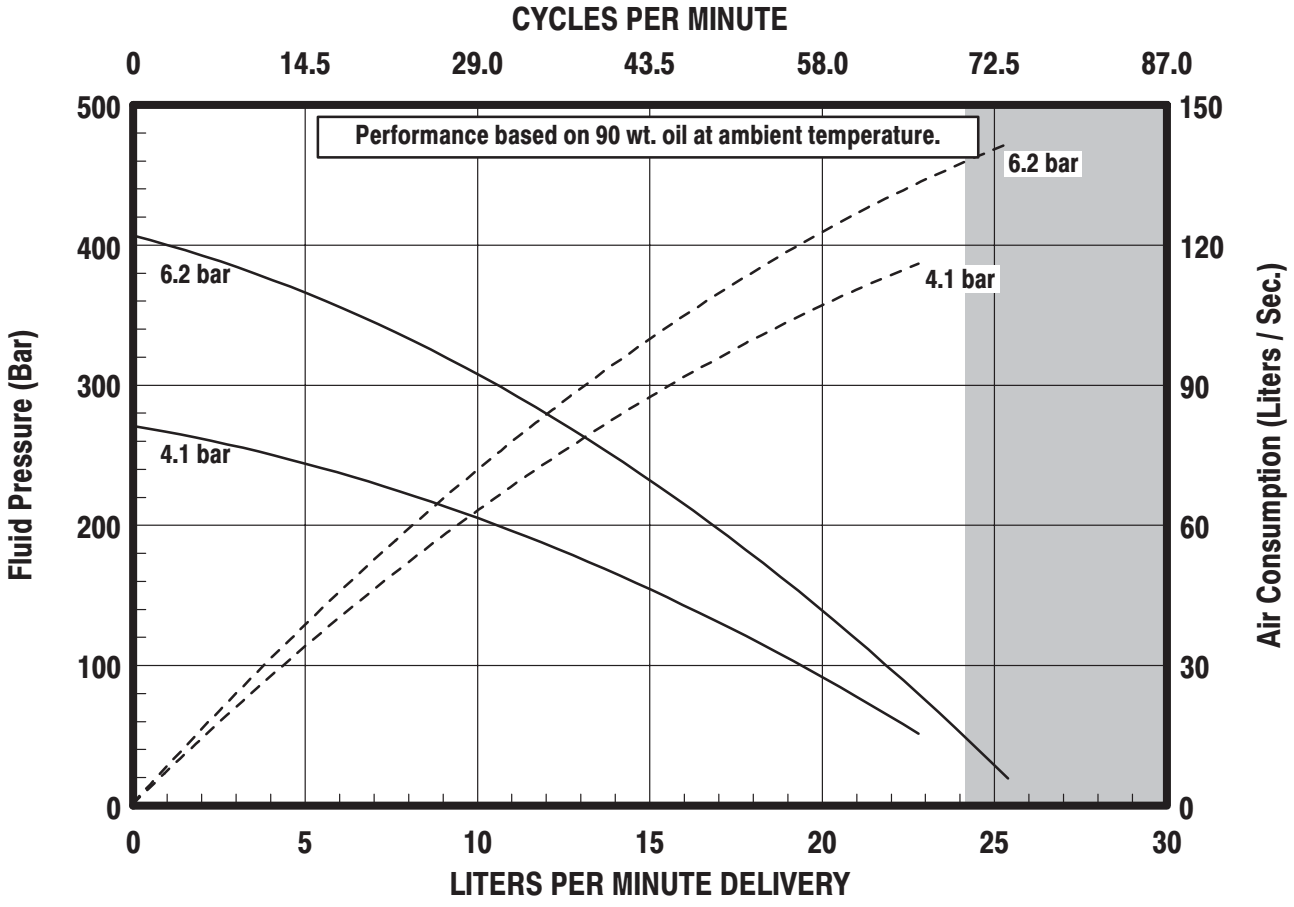
PERFORMANCE CURVES