# SALES & ENGINEERING DATA

| RATIO SERIES: | 65:1 |
|---|---|
| FLUID P.S.I. RANGE: | 0 - 5850 |

## 650963-XX3

## TWO - BALL PUMP

RELEASED: 12-11-98
REVISED: 6-15-01
S-985

## DIMENSIONAL DATA

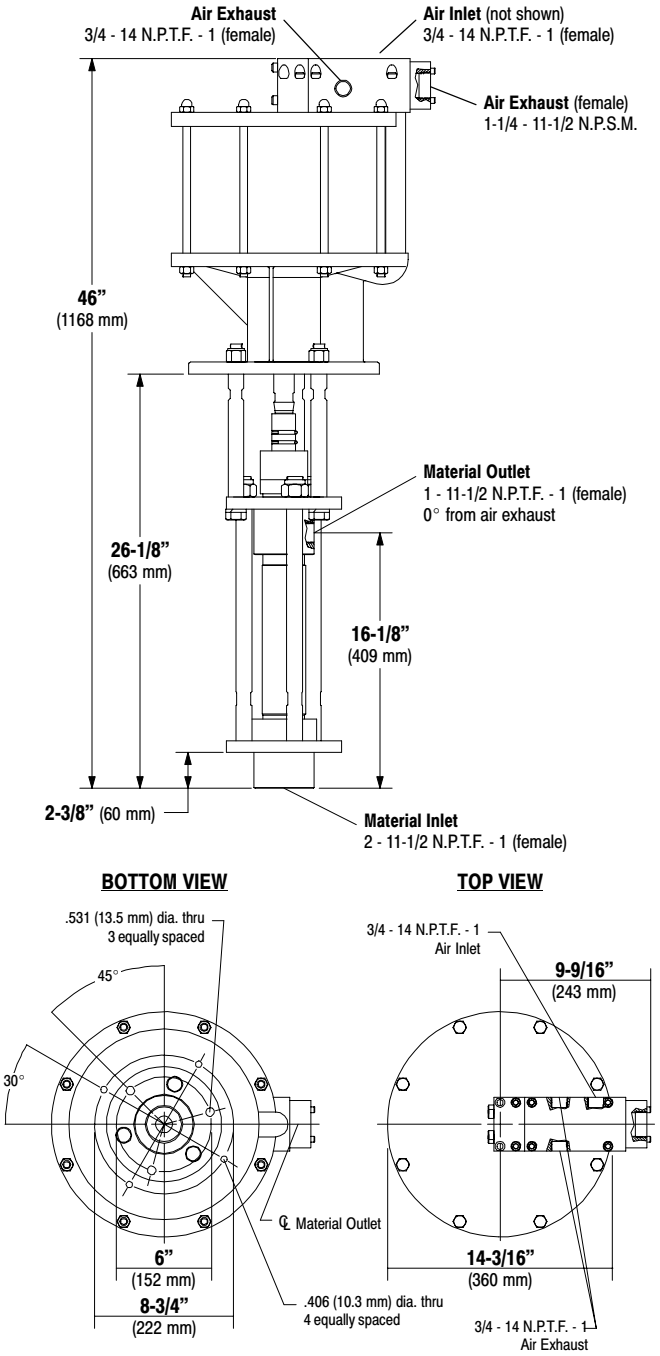


NOTE: Dimensions are shown in inches and (mm), supplied for reference only and are typically rounded up to the nearest 1/16 inch.

## SPECIFICATIONS

### CONSTRUCTION

**Model Series** (refer to option chart) . . . . . 650963-XX3
**Pump Type** . . . . . Air Operated, Two-Ball, Double Acting Pump
**Ratio** . . . . . 65:1
**Air Motor** . . . . . 66506
- **Motor Repair Kit** . . . . . 637112
- **Motor Diameter** . . . . . 12" (304.8 mm)
- **Stroke** . . . . . 6" (152.4 mm)
- **Air Inlet (female)** . . . . . 3/4 - 14 N.P.T.F. - 1
- **Air Exhaust (female)** . . . . . 1-1/4 - 11-1/2 N.P.S.M. - 1

**Lower Pump End Series** . . . . . 66475-XX3
- **Lower Pump Repair Kit** . . . . . 637098-X43
- **Packing Options:**

3 – Glass Filled Teflon
C – UHMW-PE
G – UHMW-PE / Leather staggered
P – UHMW-PE / Teflon staggered upper • UHMW-PE lower
R – Teflon / UHMW-PE staggered upper • Teflon lower

- **Material Inlet (female)** . . . . . 2 - 11-1/2 N.P.T.F. - 1
- **Material Outlet (female)** . . . . . 1 - 11-1/2 N.P.T.F. - 1

### MATERIALS OF CONSTRUCTION

**Outlet Body** . . . . . Carbon Steel, Nickel plated
**Cylinder** . . . . . 420 Stainless Steel
**Plunger** . . . . . 17-4 Stainless Steel, Chrome plated
**Upper Ball** . . . . . 440 Stainless Steel
**Upper Seat** . . . . . 440 Stainless Steel
**Lower Ball** . . . . . 440 Stainless Steel
**Lower Seat** . . . . . 440 Stainless Steel
**Inlet Body** . . . . . Carbon Steel, Nickel plated
**Weight** . . . . . 147 lbs (66.7 kgs)

### PERFORMANCE

**Air Inlet Pressure Range** . . . . . 0 - 90 p.s.i. (0 - 6.2 bar)
**Fluid Pressure Range** . . . . . 0 - 5850 p.s.i. (0 - 403.4 bar)
**Max. Rec'd Cycles / Minute** . . . . . 60
**Displacement In$^3$ Per Cycle** . . . . . 20.7
**Volume / Cycle** . . . . . 11.5 oz. (339.1 ml)
**Cycles Per Gallon** . . . . . 11.2
**Flow @ 60 Cycles / Minute** . . . . . 5.4 g.p.m. (20.4 l.p.m.)
**Noise Level @ 60 p.s.i. - 40 c.p.m.** . . . 88.0 db(A)①

① Tested with 66718 Muffler installed. The pump sound pressure level has been updated to an Equivalent Continuous Sound Level ($L_{Aeq}$) to meet the intent of ANSI S1. 13-1971, CAGI-PNEUROP S5.1 using four microphone locations.

**ACCESSORIES:**
66542 Wall Mount Bracket
67187-1 Mounting Post
66718 Silencer


INGERSOLL-RAND COMPANY
ONE ARO CENTER • BRYAN, OHIO 43506-1100
✆ (419) 636-4242 • FAX (419) 633-1674

©2001 • PRINTED IN U.S.A.
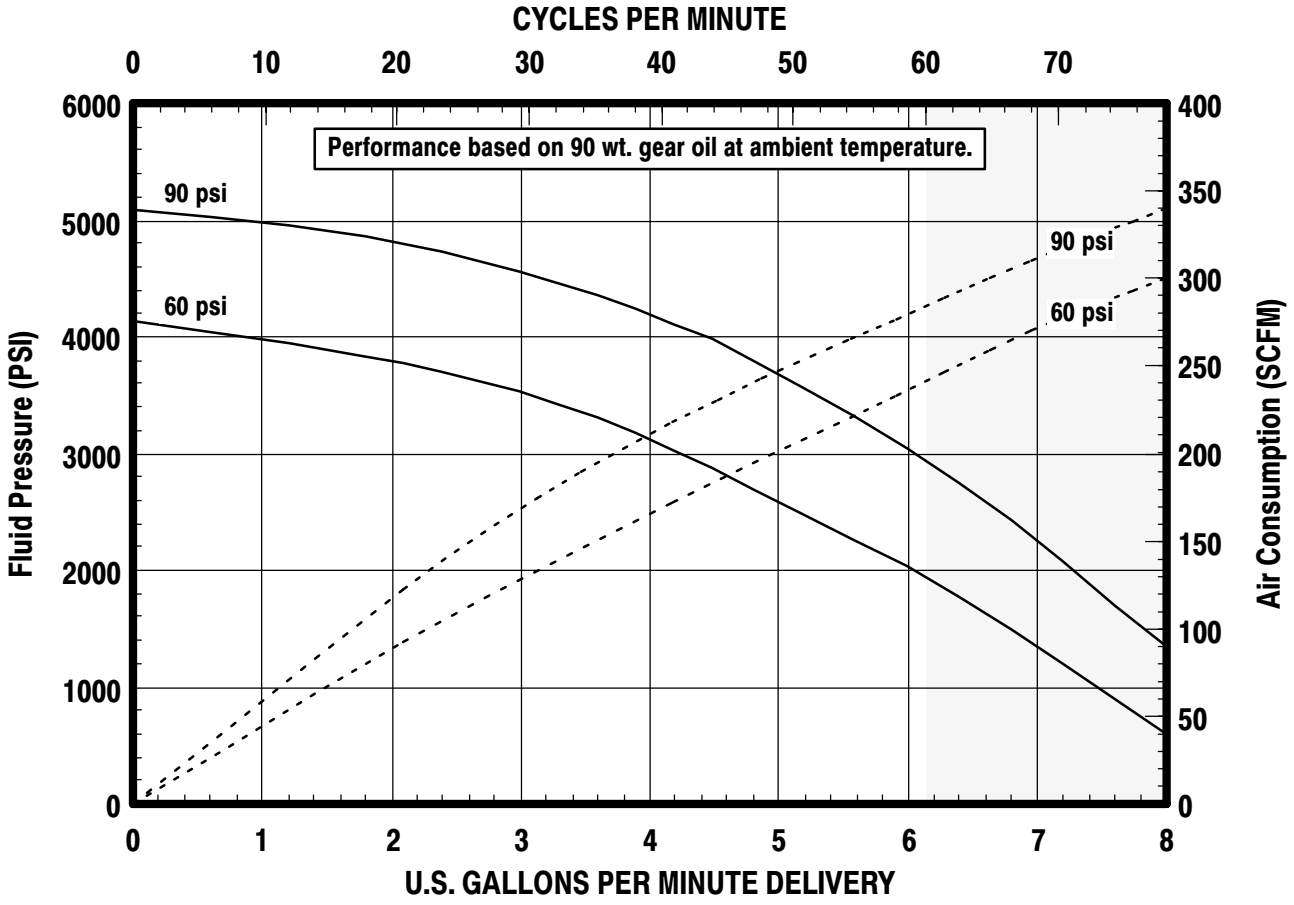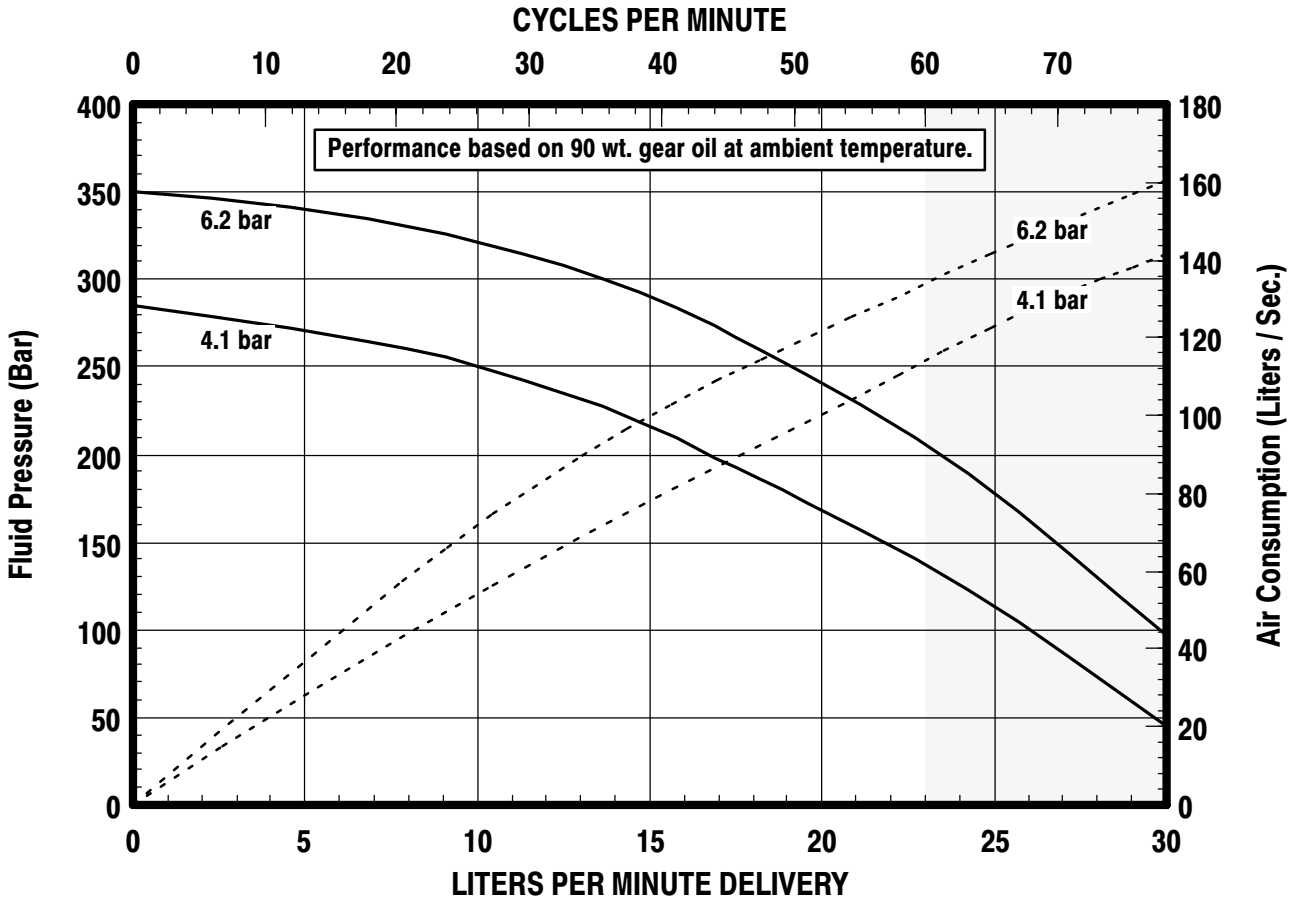
## PERFORMANCE CURVES