# SALES & ENGINEERING DATA

| | |
|---|---|
| RATIO SERIES: | 3.3:1 |
| FLUID P.S.I. RANGE: | 165 - 3994 |

## 650944-X4X
## TWO-BALL PUMP SERIES

RELEASED: 12-12-95
REVISED: 8-1-02
S-841

## DIMENSIONAL DATA

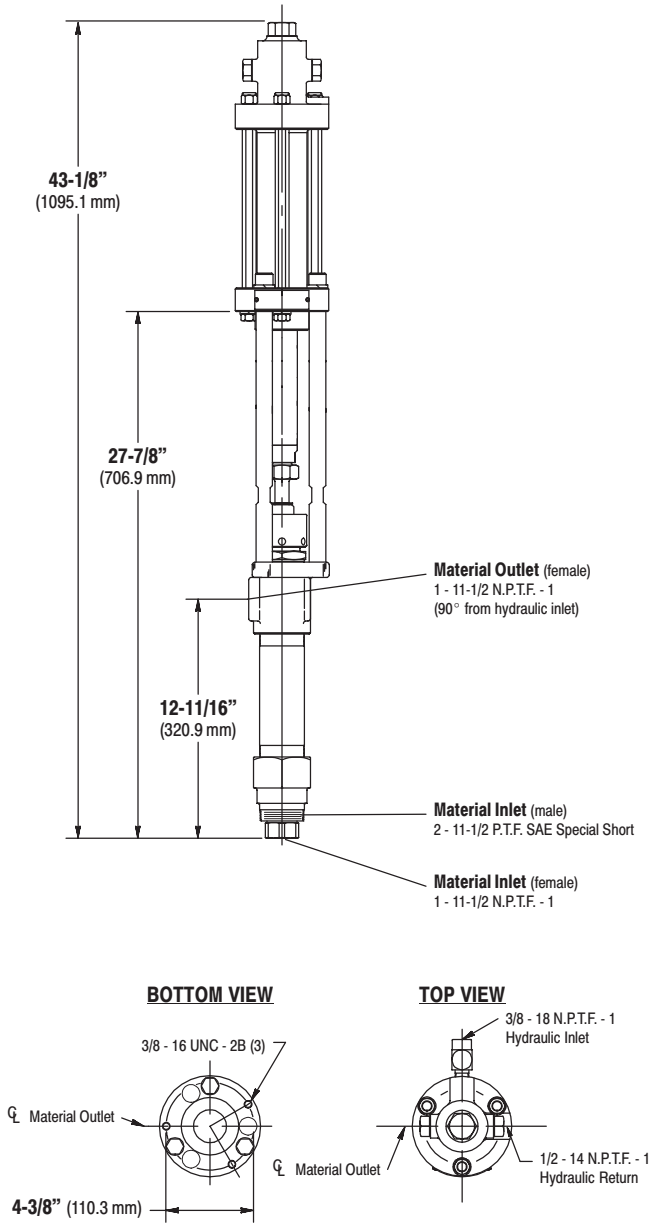


NOTE: Dimensions are shown in inches and (mm), supplied for reference only and are typically rounded up to the nearest 1/16 inch.

**ACCESSORIES:**
67069 Wall Mount Bracket

## SPECIFICATIONS

### CONSTRUCTION

| | |
|---|---|
| **Model Series** (refer to option chart below) | 650944-X4X |
| **Type** | Hydraulically Operated, Two Ball |
| **Ratio** | 3.3:1 |
| **Hydraulic Motor** | 61588-100 |
| **Motor Repair Kit** | 637164 |
| **Motor Size** | 2.062 sq." (13.3 sq. cm) |
| **Stroke** | 6" (15.2 cm) |
| **Hydraulic Inlet** (female) | 3/8 - 18 N.P.T.F. - 1 |
| **Hydraulic Return** (female) | 1/2 - 14 N.P.T.F. - 1 |
| **Lower Pump End Series** | 66301-X4X |
| **Lower Pump Repair Kit** | 637306-X43 |

**Packing Options**:

- 3 - Glass filled Teflon
- C - UHMW-PE
- G - UHMW-PE / Leather staggered
- P - UHMW-PE / Glass filled Teflon staggered upper • UHMW-PE lower
- R - Glass filled Teflon / UHMW-PE staggered upper • Glass filled Teflon lower

| | |
|---|---|
| **Material Inlet** (female) | 1 - 11-1/2 N.P.T.F. - 1 |
| (male) | 2 - 11-1/2 P.T.F. SAE (short) |
| **Material Outlet** (female) | 1 - 11-1/2 N.P.T.F. - 1 |

### MATERIALS OF CONSTRUCTION

**Lower Pump End Materials:**①

| | |
|---|---|
| **Outlet Body** | CF-8M Stainless Steel |
| **Cylinder** (650944-XX3) | 316 S.Stl Hard Chrome |
| (650944-XXB) | 316 S.Stl Ceramic coated |
| **Plunger** (650944-XX3) | 17-4 S.Stl Hard Chrome |
| (650944-XXB) | 17-4 S.Stl Ceramic coated |
| **Upper Ball** | Tungsten Carbide |
| **Upper Seat** | Tungsten Carbide |
| **Lower Ball** | 316 Stainless Steel |
| **Lower Seat** | Tungsten Carbide |
| **Inlet Body** | CF-8M Stainless Steel |
| **Weight** | 41.3 lbs (18.7 kgs) |

### PERFORMANCE

| | |
|---|---|
| **Hydraulic Inlet Pressure Range** | 50 - 1200 p.s.i. (3.4 - 82.8 bar) |
| **Fluid Pressure Range** | 165 - 3994 p.s.i. (11.4 - 275.4 bar) |
| **Required H-power @ 50 c.p.m.** | 3.2 @ 1200 p.s.i. (82.8 bar) |
| **Hydraulic flow required @ 50 c.p.m.** | 4.9 g.p.m. (18.5 l.p.m.) |
| **Maximum rec'd Cycles / Minute** | 50 |
| **Displacement In$^3$ Per Cycle** | 7.434 |
| **Volume / Cycle** | 4.1 oz. (121.8 ml) |
| **Cycles Per Gallon** | 31.1 |
| **Flow @ 50 Cycles / Minute** | 1.6 g.p.m. (6.1 l.p.m.) |
| **Noise Level** | N / A |
| **Maximum Temperature Limit** | 130° F (54° C) |

Notes:
① All wetted components are passivated or electro-polished and have corrosion resistance characteristics of 300 Stainless Steel.


INGERSOLL-RAND COMPANY
P.O. BOX 151 • ONE ARO CENTER • BRYAN, OHIO 43506-0151
(419) 636-4242 • FAX (419) 633-1674

©2002 • PRINTED IN U.S.A.
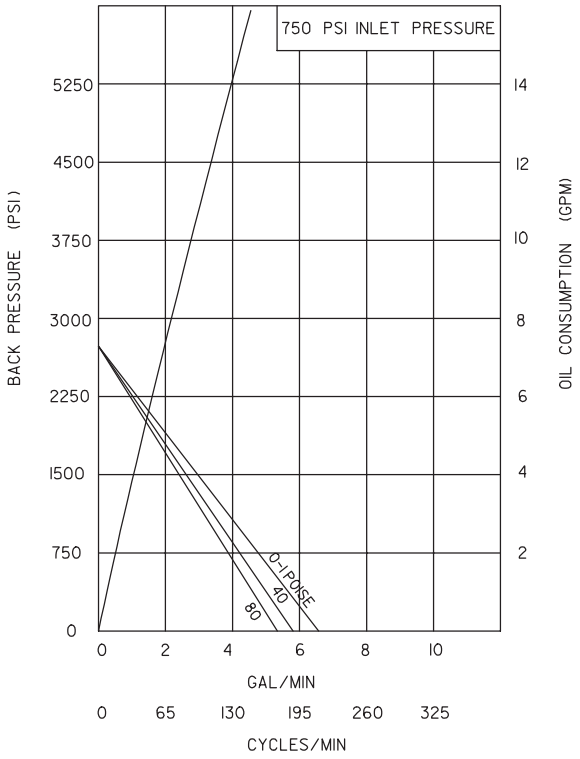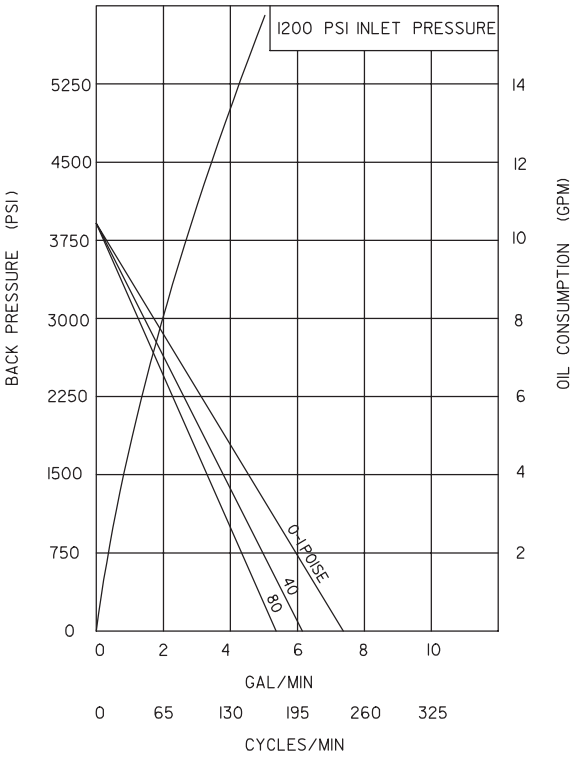
# TWO-BALL PUMP, 2.062 SQ.” HYDRAULIC MOTOR, 6” STROKE, 3.3:1 RATIO