SALES & ENGINEERING DATA

RATIO SERIES:	7:1
FLUID PSI RANGE:	210 – 1009

650839-X4C

FOUR – BALL PUMP

RELEASED: 9–25–98
REVISED:
S–942

DIMENSIONAL DATA

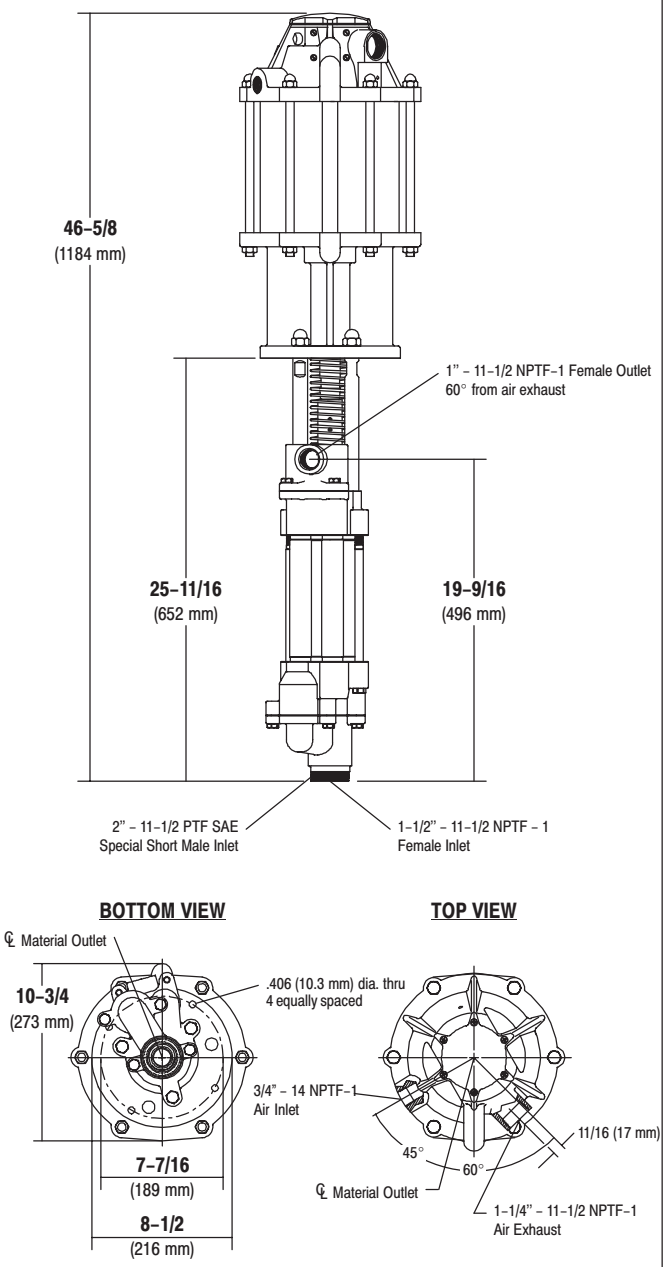

NOTE: Dimensions are shown in inches and (mm), supplied for reference only and are typically rounded up to the nearest 1/16 inch.

SPECIFICATIONS

CONSTRUCTION

Model Series (refer to option chart) 650839–X4C
Pump Type . . . . . Air Operated, Four–Ball, Double Acting Pump
Ratio 7:1
Air Motor 66523
- **Motor Repair Kit** 66614
- **Motor Diameter** . . . . . 8" (20.3 cm)
- **Stroke** . . . . . 6" (15.2 cm)
- **Air Inlet** . . . . . 3/4" – 14 n.p.t.f.–1 (female)
- **Air Exhaust** . . . . . 1–1/4" – 11–1/2 n.p.t.f.–1 (female)

Lower Pump End Series . . . 67200–X4C
- **Lower Pump Repair Kit** . 637317–X4C
- **Packing Options:**

7 – Teflon
C – UHMW–PE
F – UHMW–PE / Leather staggered upper • UHMW–PE lower
P – UHMW–PE / Teflon staggered upper • UHMW–PE lower
R – Teflon / UHMW–PE staggered upper • Teflon lower

- **Material Inlet**
  - Female thread . . . . 1–1/2" – 11–1/2 n.p.t.f. – 1
  - Male thread . . . . . 2" – 11–1/2 p.t.f. SAE spec. short
- **Material Outlet** . . . . . 1" – 11–1/2 n.p.t.f. – 1 (female)

MATERIALS OF CONSTRUCTION

Outlet Body . . . . . CF–8M Stainless Steel
Cylinder . . . . . 304 Stainless Steel, Ceramic coating
Plunger . . . . . 17–4 Stainless Steel, Ceramic coating
Upper Ball . . . . . 316 Stainless Steel
Upper Seat . . . . . 17–4 Stainless Steel
Lower Ball . . . . . 316 Stainless Steel
Lower Seat . . . . . 17–4 Stainless Steel
Inlet Body . . . . . CF–8M Stainless Steel
Weight . . . . . 94 lbs (42.6 kgs)

PERFORMANCE

Air Inlet Pressure Range . . . . . 30 – 120 p.s.i. (2.1 – 8.3 bar)
Fluid Pressure Range . . . . . 210 – 1009 p.s.i. (14.5 – 69.6 bar)
Max. Rec'd Cycles / Minute . . . 60
Displacement In^3 Per Cycle . . . 77.5
Volume / Cycle . . . . . 42.9 oz. (1269 ml)
Cycles Per Gallon 2.98
Flow @ 60 Cycles / Minute . . . 20.1 g.p.m. (76.2 l.p.m.)
Noise Level @ 60 p.s.i. – 40 c.p.m. 89.8 db(A)①

① Tested with 91790 Muffler installed. The pump sound pressure level has been updated to an Equivalent Continuous Sound Level (L_{Aeq}) to meet the intent of ANSI S1. 13–1971, CAGI–PNEUROP S5.1 using four microphone locations.

ACCESSORIES:
66542 Wall Mount Bracket
67187–1 Mounting Post
92460 Silencer

ARO
INGERSOLL–RAND COMPANY
ONE ARO CENTER • BRYAN, OHIO 43506–0151
✆ (419) 636–4242 • FAX (419) 633–1674

©1998 • PRINTED IN U.S.A.
INGERSOLL-RAND
FLUID PRODUCTS
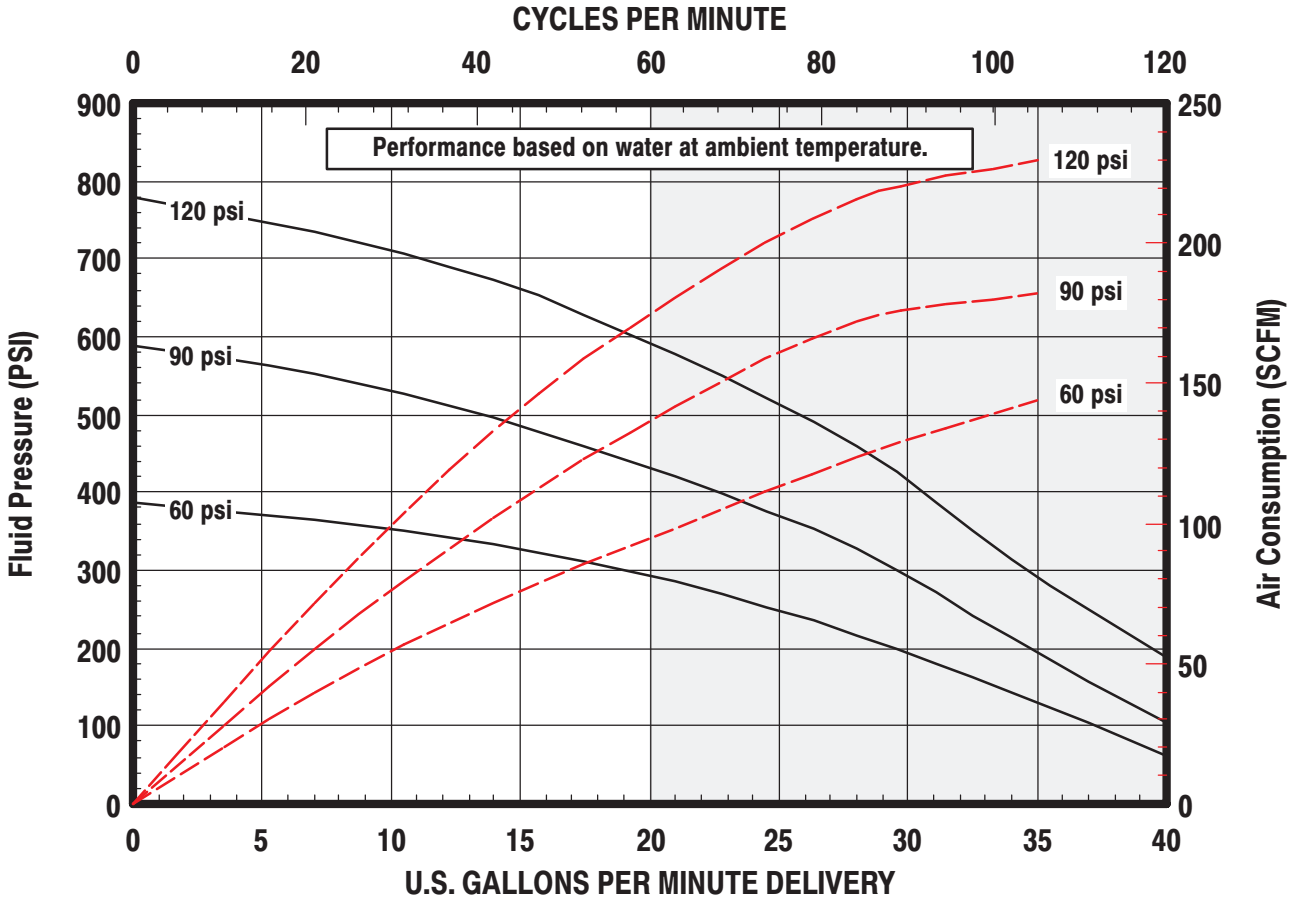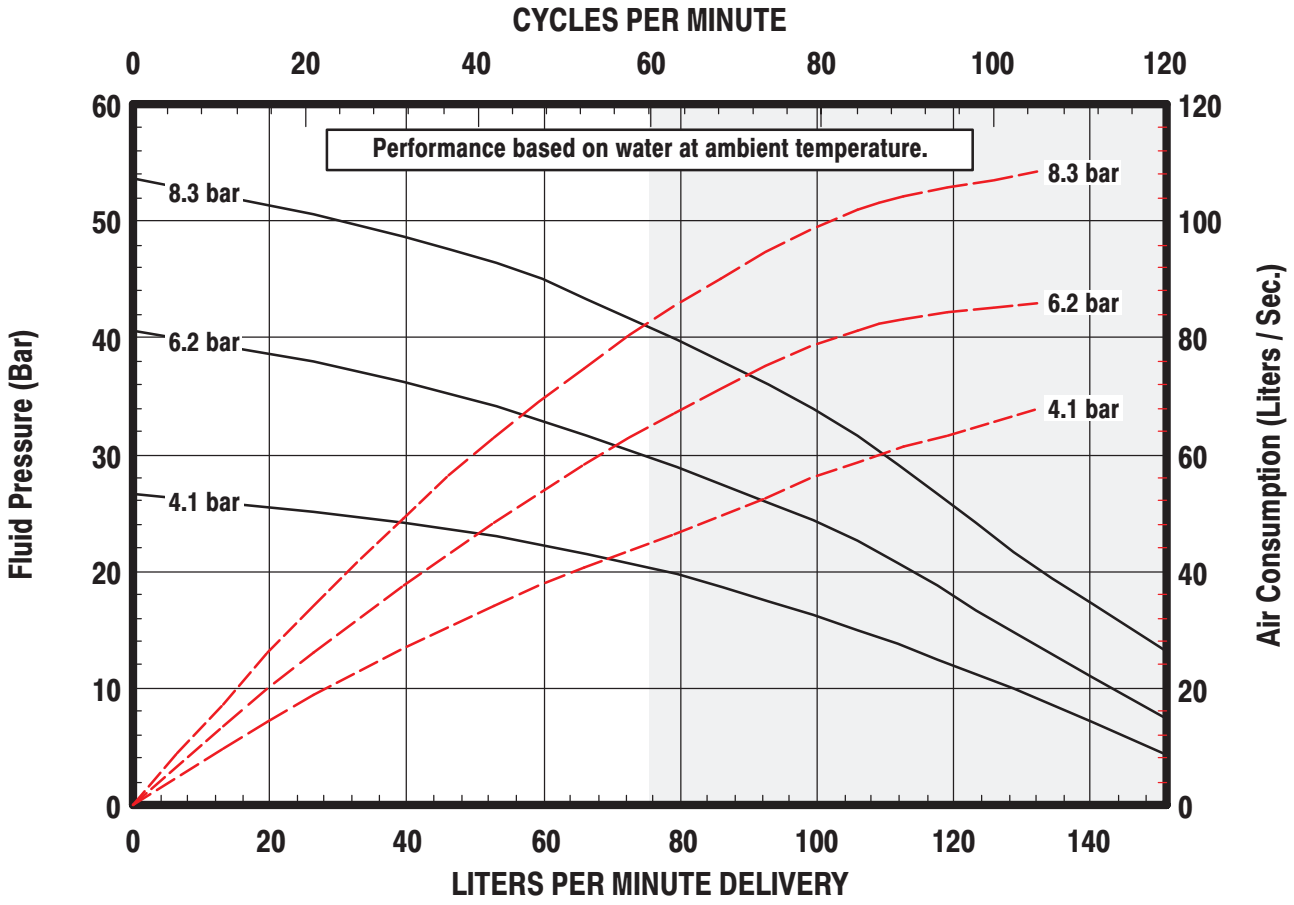
PERFORMANCE CURVES