SALES & ENGINEERING DATA

RATIO SERIES:	2:1
FLUID P.S.I. RANGE:	0 - 300

650137-1

DOUBLE ACTING PUMP

RELEASED: 11-6-98
REVISED: 6-13-02
S-962

DIMENSIONAL DATA

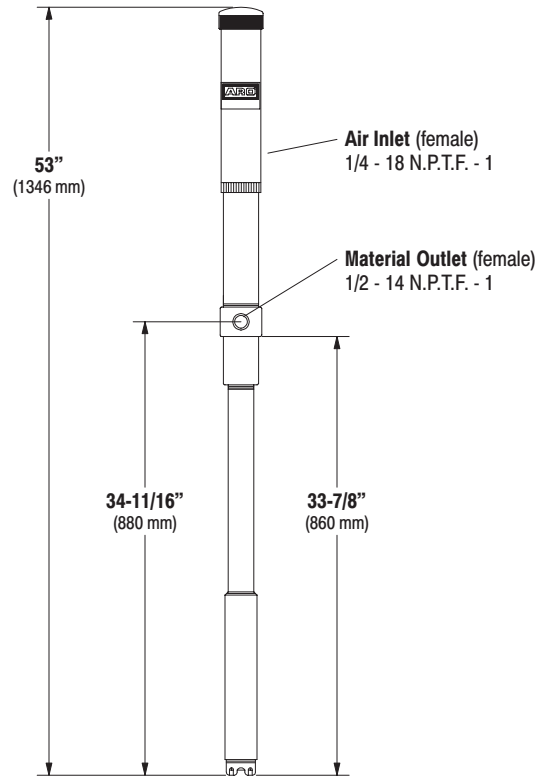

NOTE: Dimensions are shown in inches and (mm), supplied for reference only and are typically rounded up to the nearest 1/16 inch.

SPECIFICATIONS

CONSTRUCTION

Model Series (refer to option chart)	650137-1
Pump Type	Air Operated, Double Acting Pump
Ratio	2:1
Air Motor	60702
Motor Repair Kit	66098
Motor Diameter	2" (50.8 mm)
Stroke	6" (152.4 mm)
Air Inlet (female)	1/4 - 18 N.P.T.F - 1
Lower Pump End Series	66601-10
Lower Pump Repair Kit	637044
Material Inlet	immersed
Material Outlet (female)	1/2 - 14 N.P.T.F. - 1

MATERIALS OF CONSTRUCTION

Outlet Body	316 Stainless Steel
Cylinder	316 / 440 Stainless Steel
Plunger	316 Stainless Steel
Upper Packing	Ryton filled Teflon
Lower Packing	Mineral filled Teflon
Lower Ball	316 Stainless Steel
Lower Seat	316 Stainless Steel
Inlet Body	316 Stainless Steel
Weight	19 lbs (8.6 kgs)

PERFORMANCE

Air Inlet Pressure Range	0 - 150 p.s.i. (0 - 10.3 bar)
Fluid Pressure Range	0 - 300 p.s.i. (0 - 20.7 bar)
Maximum Rec'd Cycles / Minute	120
Displacement In^3 Per Cycle	8.0
Volume / Cycle	4.4 oz. (131 ml)
Cycles Per Gallon	28.9
Noise Level @ 90 p.s.i. - 40 c.p.m.	81 db(A)①

① The pump sound pressure level has been updated to an Equivalent Continuous Sound Level (L_{Aeq}) to meet the intent of ANSI S1. 13-1971, CAGI-PNEUROP S5.1 using four microphone locations.

ACCESSORIES:
61113 Wall Mount Bracket

INGERSOLL-RAND COMPANY
ONE ARO CENTER • BRYAN, OHIO 43506-1100
✆ (419) 636-4242 • FAX (419) 633-1674
©2002 • PRINTED IN U.S.A.
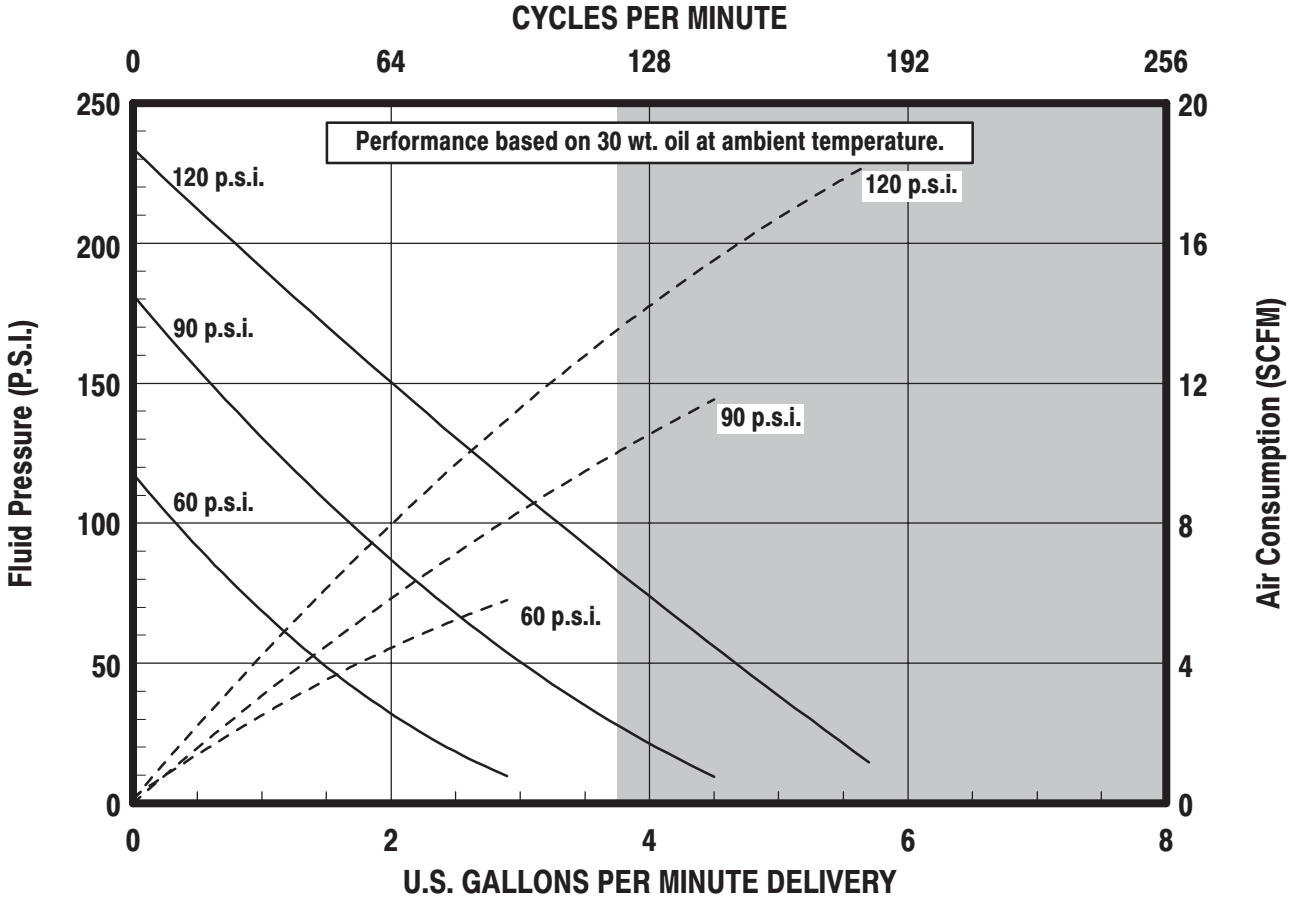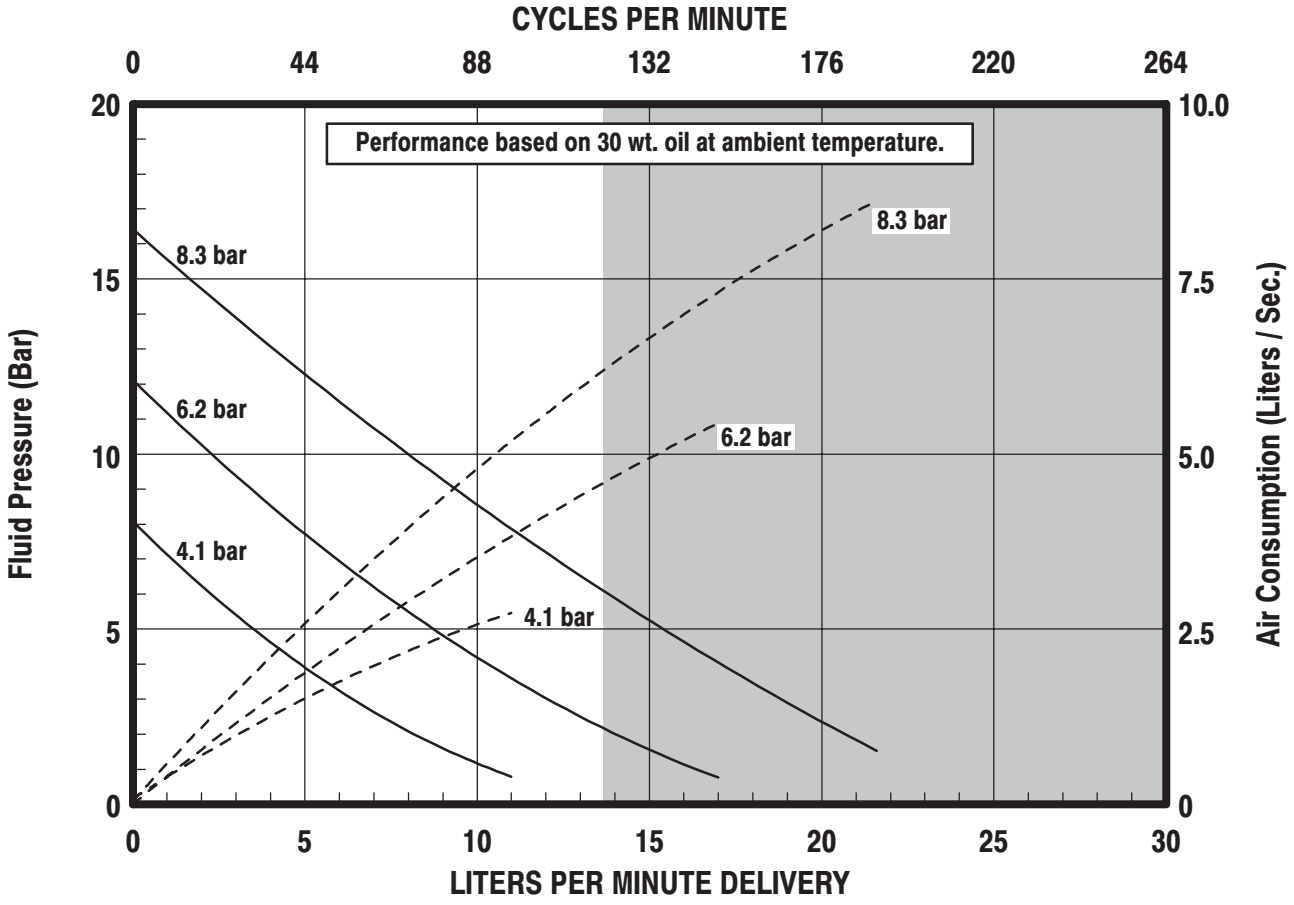
PERFORMANCE CURVES