OPERATOR'S MANUAL 66301-X

INCLUDING: SERVICE KIT, TROUBLESHOOTING, PARTS LIST, DISASSEMBLY & REASSEMBLY

RELEASED: 12-15-95
REVISED: 2-18-00
(REV. C)

TWO-BALL STYLE LOWER PUMP END

ALSO COVERS 637306-X43 SERVICE KITS

READ THIS MANUAL CAREFULLY BEFORE INSTALLING, OPERATING OR SERVICING THIS EQUIPMENT.

It is the responsibility of the employer to place this information in the hands of the operator. Keep for future reference.

SERVICE KITS

- Use only genuine ARO® replacement parts to assure compatible pressure rating and longest service life.
- 637306-X43 for general repair of 66301-XXX Lower Pump End.

GENERAL DESCRIPTION

⚠WARNING DO NOT EXCEED MAXIMUM OPERATING PRESSURE AS INDICATED ON PUMP MODEL PLATE.

⚠WARNING REFER TO GENERAL INFORMATION SHEET FOR ADDITIONAL SAFETY PRECAUTIONS AND IMPORTANT INFORMATION.

- This manual only covers the Lower Pump Section, it is one of four documents which support an ARO pump. Replacement copies of these forms are available upon request.
  - ❑ 650XXX-X PUMP MODEL OPERATOR'S MANUAL.
  - ❑ GENERAL INFORMATION FOR AIR OPERATED OR HYDRAULICALLY OPERATED PUMPS.
  - ❑ LOWER PUMP END OPERATOR'S MANUAL.
  - ❑ AIR OR HYDRAULIC MOTOR OPERATOR'S MANUAL.
- The two-ball design provides better priming of the lower foot valve. The double acting feature is standard in all ARO industrial pumps, material is delivered to the pump discharge outlet on both the up and down stroke.

MAINTENANCE

The air / hydraulic motor is completely separate from the lower pump end. This helps to keep the motor from being contaminated by the material being pumped. Periodically, flush entire pump system with a solvent that is compatible with the material being pumped.

Keep solvent cup filled with this compatible solvent. This will keep material from drying on the piston rod, which would drag thru the packings, ruin them and eventually scour the piston rod.

Provide a clean work surface to protect sensitive internal moving parts from contamination from dirt and foreign matter during disassembly and reassembly.

Before reassembling, lubricate parts as required. When assembling "O" rings, or parts adjacent to "O" rings, exercise care to prevent damage to "O" rings and "O" ring groove surface.

LOWER PUMP END DESCRIPTION CHART

66301 - X X X

PACKING MATERIAL
- 3 – Glass Filled Teflon (upper and lower)
- C – UHMW-PE (upper and lower)
- G – UHMW-PE / Leather staggered (upper and lower)
- P – UHMW-PE / Glass Filled Teflon staggered (upper)
  – UHMW-PE (lower)
- R – Glass Filled Teflon / UHMW-PE staggered (upper)
  – Glass Filled Teflon (lower)

SPRING ARRANGEMENT
- 4 – Multiple Wave Spring with 316 Stainless Steel Balls
- 7 – Multiple Wave Spring with 440 Stainless Steel Balls

PLUNGER TYPE
- 3 – Hardened Stainless Steel with Hard Chrome Plating
- B – Hardened Stainless Steel with Ceramic Coating

SERVICE KIT SELECTION 66301 - X X X

EXAMPLE: Lower Pump End # 66301-C43 637306 - X 43
Service Kit # 637306-C43 Packing

TROUBLE SHOOTING

- **No material at outlet (pump continually cycles).** Check material supply, disconnect or shut off the air supply and replenish the material, reconnect.
- **Material on one stroke only (fast downstroke).** The (21) lower ball may not be seating in the (22) seat (see lower pump disassembly). Remove the ball from the seat, clean and inspect the ball and seat area. If the ball or seat is damaged, replace.
- **Material on one stroke only (fast upstroke).** Check for worn or damaged packings and seals. Replace the packings and seals as necessary.
- **Material leakage out of the solvent cup or material appears on the pump plunger rod.** Relieve the pressure in the pump and tighten the solvent cup until leakage discontinues. If this procedure does not aid in stopping the leakage problem, the upper packings may be worn (see lower pump disassembly). Replace the packings as necessary.

ARO
INGERSOLL-RAND COMPANY
P.O. BOX 151 • ONE ARO CENTER • BRYAN, OHIO 43506-0151
✆ (419) 636-4242 • FAX (419) 633-1674
©2000 • PRINTED IN U.S.A.
INGERSOLL-RAND
FLUID PRODUCTS

PARTS LIST

ITEM	DESCRIPTION (Size in Inches)	QTY	PART NO.	[MTL]
1	Solvent Cup	(1)	94173	[SS]
6	Outlet Body	(1)	94169	[SS]
✓ 8	"O" Ring (1/16" x 2-1/4" o.d.)	(3)	Y328-34	[T]
9	Tube (66301-XX3)	(1)	94178	[PSS]
	(66301-XXB)	(1)	94178-2	[CSS]
15	Inlet Body	(1)	94204	[SS]
21	Ball (1-3/16" o.d.) (66301-X4X)	(1)	90949	[SS]
	(66301-X7X)	(1)	Y16-138	[SH]
22	Seat	(1)	94170	[TC]
✓ 23	"O" Ring (1/16" x 1-5/8" o.d.)	(1)	Y328-29	[T]
26	Plunger Rod (66301-XX3)	(1)	90297-1	[PSH]
	(66301-XXB)	(1)	90297-2	[CSH]
27	Ball (11/32" o.d.)	(1)	94210	[SS]
28	Seat	(1)	91076	[TC]
33	Piston	(1)	94206	[SH]
36	Adapter	(1)	94235	[SH]
43	Wave Spring	(1)	94138	[SH]
44	Washer	(1)	94192	[SS]
46	Washer	(1)	94213	[SS]

ITEM	DESCRIPTION (Size in Inches)	QTY	PART NO.	[MTL]
47	Bowed Washer	(1)	90588	[SS]
50	Female Packing Washer	(1)	94201-2	[PPS]
✓ 51	"V" Packing (66301-3XX, -RXX)	(3)	93687-2	[GFT]
	(66301-CXX, -GXX, -PXX)	(3)	93687-4	[UH]
✓ 52	"V" Packing (66301-3XX, -PXX)	(2)	93687-2	[GFT]
	(66301-CXX, -RXX)	(2)	93687-4	[UH]
	(66301-GXX)	(2)	93687-1	[L]
53	Male Packing Washer	(1)	94200	[SS]
54	Female Packing Washer	(1)	94203-2	[PPS]
✓ 55	"V" Packing (66301-3XX, -RXX)	(3)	93688-2	[GFT]
	(66301-CXX, -GXX, -PXX)	(3)	93688-4	[UH]
✓ 56	"V" Packing (66301-3XX, -RXX)	(2)	93688-2	[GFT]
	(66301-CXX, -PXX)	(2)	93688-4	[UH]
	(66301-GXX)	(2)	93688-1	[L]
57	Male Packing Washer	(1)	94272	[SS]
70	Inlet Adapter	(1)	94236	[SS]
74	Nut	(1)	94166	[SS]
77	Bushing	(1)	94181-2	[PPS]
✓	Service Kit		637306-X43	

MATERIAL CODE

[CSH] = Ceramic Coated Hard Stainless Steel
[CSS] = Ceramic Coated Stainless Steel
[GFT] = Glass Filled Teflon
[L] = Leather
[PPS] = Polyphenylene Sulfide
[PSH] = Hard Chrome Plated Hard Stainless Steel
[PSS] = Hard Chrome Plated Stainless Steel
[SH] = Hard Stainless Steel
[SS] = Stainless Steel
[T] = Teflon
[TC] = Tungsten Carbide
[UH] = UHMW-PE

LOWER PUMP DISASSEMBLY

IMPORTANT: The lower pump is designed so that access to the packings can be accomplished without disassembly of the inlet / outlet bodies from the main pump tube. Complete lower pump disassembly should not be necessary, in most cases skip disassembly steps 3, 4 and 5 below. NOTE: All threads are right hand.

1. Secure the lower pump assembly in a vise, clamping on the (6) outlet body.
2. Loosen the (1) solvent cup and unscrew the (74) nut and remove the assembly from the lower pump.
3. Remove the (8) "O" ring from the (6) outlet body. Set this assembly aside.
4. Unscrew the (15) inlet body and remove from the (9) tube.
5. Unscrew the (9) tube from the (6) outlet body and remove the two (8) "O" rings.
6. Remove the (26) plunger and components from the (9) tube. Remove the (6) outlet body from the vise.
7. Secure the (26) plunger and components in a vise and unscrew the (33) piston from the plunger.
8. Remove the (46) washer, (47) bowed washer, (57) male packing washer, (55 and 56) "V" packings and (54) female packing washer.
9. Unscrew the (36) adapter from the (33) piston, releasing the (28) seat and (27) ball.
10. Secure the (74) nut in a vise and unscrew the (1) solvent cup.
11. Remove the (77) bushing, (44) washer, (50) female packing washer, (51 and 52) "V" packings, (53) male packing washer and (43) wave spring.
12. Secure the (15) inlet body in a vise and unscrew the (70) inlet adapter, releasing the (22) seat, (23) "O" ring and (21) ball.

LOWER PUMP ASSEMBLY

NOTE: Inspect and replace old parts with new parts as necessary. Look for deep scratches on metallic surfaces and nicks or cuts in "O" rings and packings. Refer to sealant and torque notes in figure 1.

1. Secure the (74) nut in a vise and insert the (43) wave spring, (53) male packing washer, (51 and 52) "V" packings, (50) female packing washer and (44) washer into the (74) nut.
2. Place the (77) bushing into the (1) solvent cup and screw the (1) solvent cup into the (74) nut. **Do not tighten.**
3. Secure the (6) outlet body in a vise and place the (8) "O" ring at the bottom of the (74) nut and screw into the (6) outlet body. Tighten the (74) nut to 150 ft lbs (203.4 Nm).
4. Slide the (26) plunger rod into the (1) solvent cup and through the upper packing. **Be careful not to damage the packings.**
5. Assemble the (33) piston by placing the (54) female packing washer, (55 and 56) "V" packings, (57) male packing washer, (47) bowed washer and (46) washer onto (33) piston.
6. Screw the (33) piston assembly into the (26) plunger rod and tighten to 20 ft lbs (27.12 Nm), place the (27) ball, and (28) seat into the (33) piston and screw the (36) adapter into place and tighten to 20 ft lbs (27.12 Nm).
7. Place the (8) "O" rings at each end of the (9) tube and slide the (9) tube over the lower piston assembly and screw into the (6) outlet body. Tighten to 300 ft lbs (406.8 Nm).
8. Screw the (15) inlet body onto the (9) tube and tighten to 300 ft lbs (406.8 Nm).
9. Place the (21) ball, (23) "O" ring and (22) seat into the (15) inlet body and screw the (70) inlet adapter into the (15) inlet body and tighten to 300 ft lbs (406.8 Nm).
10. Tighten the (1) solvent cup.

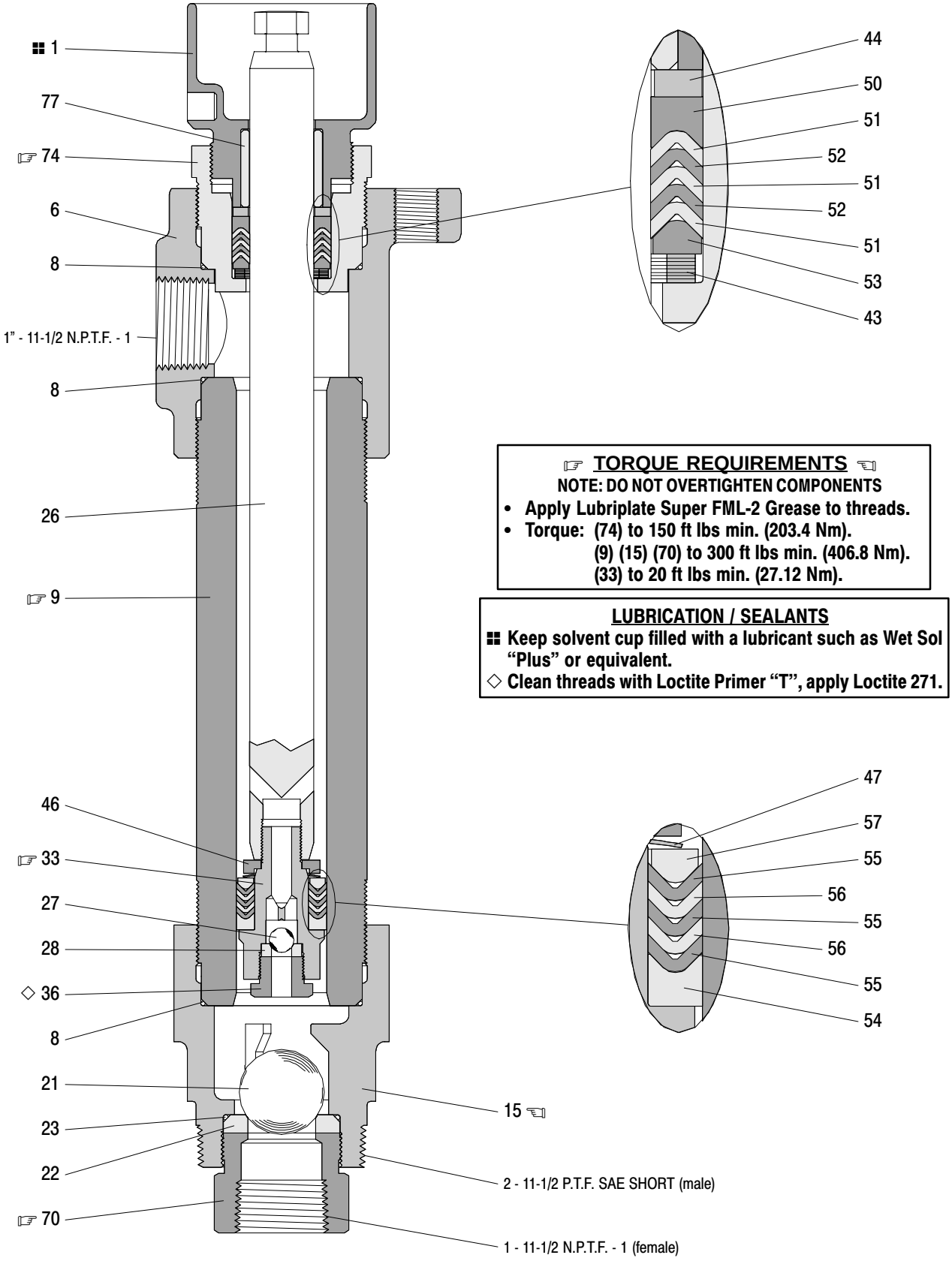

TORQUE REQUIREMENTS

NOTE: DO NOT OVERTIGHTEN COMPONENTS

- **Apply Lubriplate Super FML-2 Grease to threads.**
- **Torque: (74) to 150 ft lbs min. (203.4 Nm).**
  (9) (15) (70) to 300 ft lbs min. (406.8 Nm).
  (33) to 20 ft lbs min. (27.12 Nm).

LUBRICATION / SEALANTS

Keep solvent cup filled with a lubricant such as Wet Sol "Plus" or equivalent.

◇ Clean threads with Loctite Primer "T", apply Loctite 271.

FIGURE 1