OPERATOR'S MANUAL PH10A-X-X

INCLUDING: OPERATION, INSTALLATION & SERVICE

RELEASED: 7-7-00
REVISED: 3-2-06
(REV. H)

1" HIGH PRESSURE DIAPHRAGM PUMP

3:1 RATIO (METALLIC)

READ THIS MANUAL CAREFULLY BEFORE INSTALLING, OPERATING OR SERVICING THIS EQUIPMENT.

It is the responsibility of the employer to place this information in the hands of the operator. Keep for future reference.

SERVICE KITS

Refer to "Model Description Chart" to match the pump material options.
637338 for air section repair (see page 6).
637339 for fluid section repair (models PH10A-XXX-XSX)(see page 4).
637339-1 for fluid section repair (models PH10A-XXX-XHX)(see page 4).

PUMP DATA

Models . . . . . see "Model Description Chart" for "-XXX".
Pump Type . . . . . Metallic Air Operated, High Pressure, Double Diaphragm.
Material . . . . . see "Model Description Chart".
Weight . . . . . 94.73 lbs (42.97 kg)
Maximum Air Inlet Pressure . . . . . 100 p.s.i. (6.9 bar)
Maximum Outlet Pressure . . . . . 300 p.s.i. (20.4 bar)
Maximum Flow Rate (flooded inlet) . . . 26 g.p.m. (98.4 l.p.m.)
Maximum Particle Size . . . . . 1/8" dia. (3.2 mm)
Maximum Temperature Limits (diaphragm / ball / seal material)
Nitrile . . . . . 10° to 180° F (-12° to 82° C)
T.F.E. (Teflon®) . . . . . 40° to 225° F (4° to 107° C)
Displacement / Cycle @ 100 p.s.i. . . . . 0.06 gal. (0.23 lit.)
Dimensional Data . . . . . see page 8.
Noise Level @ 70 p.s.i., 60 c.p.m. . . . . . 84.5 db(A)*

* The pump sound pressure levels published here have been updated to an Equivalent Continuous Sound Level (L_{Aeq}) to meet the intent of ANSI S1.13-1971, CAGI-PNEUROP S5.1 using four microphone locations.

NOTICE: All possible options are shown in the chart. However, certain combinations may not be recommended, consult a representative or the factory if you have questions concerning availability.

GENERAL DESCRIPTION

The 1" metallic diaphragm pump offers high volume delivery even at low air pressures, easy self priming, the ability to pump various viscosity materials and the ability to pass solids (as stated in the chart above). The pump is offered with optional wetted parts configurations to satisfy a variety of application requirements. Refer to the "Model Description Chart".

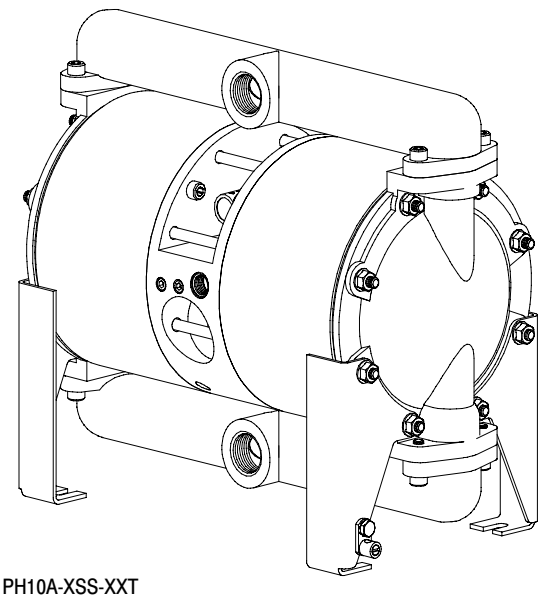

PH10A-XSS-XXT
1" DIAPHRAGM PUMP

Figure 1

MODEL DESCRIPTION CHART

PH10 A - X S S - X X T

Center Section Material
A - Aluminum

Fluid Connection
A - 1 - 11-1/2 N.P.T.F. - 1
B - Rp 1 (1 - 11 BSP parallel)

Fluid Caps & Manifold Material
S - Stainless Steel

Hardware Material
S - Stainless Steel

Seat Material
H - Hard 440 Stainless Steel
S - 316 Stainless Steel

Ball Material
H - Hard 440 Stainless Steel
S - 316 Stainless Steel

Diaphragm Material
T - T.F.E. (Teflon)

INGERSOLL RAND COMPANY LTD
P.O. BOX 151 • ONE ARO CENTER • BRYAN, OHIO 43506-0151
(800) 276-4658 • FAX (800) 266-7016
©2006
CCN 99755480

Ingersoll Rand

OPERATING AND SAFETY PRECAUTIONS

READ, UNDERSTAND, AND FOLLOW THIS INFORMATION TO AVOID INJURY AND PROPERTY DAMAGE.

EXCESSIVE INLET AIR PRESSURE
STATIC SPARK
EXPLOSION HAZARD

HAZARDOUS MATERIALS
HAZARDOUS PRESSURE

INJECTION HAZARD

⚠ WARNING EXCESSIVE AIR PRESSURE. Can cause pump damage, personal injury or property damage.

- Do not exceed the maximum inlet air pressure as stated on the pump model plate.
- Be sure material hoses and other components are able to withstand fluid pressures developed by this pump. Check all hoses for damage or wear. Be certain dispensing device is clean and in proper working condition.

⚠ WARNING STATIC SPARK. Can cause explosion resulting in severe injury or death. Ground pump and pumping system.

- Sparks can ignite flammable material and vapors.
- The pumping system and object being sprayed must be grounded when it is pumping, flushing, recirculating or spraying flammable materials such as paints, solvents, lacquers, etc. or used in a location where surrounding atmosphere is conducive to spontaneous combustion. Ground the dispensing valve or device, containers, hoses and any object to which material is being pumped.
- Use the pump grounding lug provided on metallic pumps for connection of a ground wire to a good earth ground source. Use Aro part no. 66885-1 ground kit or a suitable ground wire (12 ga. / 2.6 mm min. dia.).
- Secure pump, connections and all contact points to avoid vibration and generation of contact or static spark.
- Consult local building codes and electrical codes for specific grounding requirements.
- After grounding, periodically verify continuity of electrical path to ground. Test with an ohmmeter from each component (e.g., hoses, pump, clamps, container, spray gun, etc.) to ground to insure continuity. Ohmmeter should show 0.1 ohms or less.
- Submerse the outlet hose end, dispensing valve or device in the material being dispensed if possible. (Avoid free streaming of material being dispensed.)
- Use hoses incorporating a static wire.
- Use proper ventilation.
- Keep inflammables away from heat, open flames and sparks.
- Keep containers closed when not in use.

⚠ WARNING INJECTION HAZARD. Any material injected into flesh can cause severe injury or death. If an injection occurs, immediately contact a doctor.

- Do not grab front end of dispensing device.
- Do not aim dispensing device at anyone or any part of the body.
- Disconnect air supply line and relieve pressure from the system by opening dispensing valve or device and / or carefully and slowly loosening and removing outlet hose or piping from pump.

⚠ WARNING HAZARDOUS PRESSURE. Can result in serious injury or property damage. Do not service or clean pump, hoses or dispensing valve while the system is pressurized.

⚠ WARNING HAZARDOUS MATERIALS. Can cause serious injury or property damage. Do not attempt to return a pump to the factory or service center that contains hazardous material. Safe handling practices must comply with local and national laws and safety code requirements.

- Obtain Material Safety Data Sheets on all materials from the supplier for proper handling instructions.

⚠ WARNING EXPLOSION HAZARD. Models containing aluminum wetted parts cannot be used with Ill.-Trichloroethane, Methylene Chloride or other Halogenated Hydrocarbon solvents which may react and explode.

- Check the pump wetted parts for compatibility before using with solvents of this type.

⚠ CAUTION Verify the chemical compatibility of the pump wetted parts and the substance being pumped, flushed or recirculated. Chemical compatibility may change with temperature and concentration of the chemical(s) within the substances being pumped, flushed or circulated. For specific fluid compatibility, consult the chemical manufacturer.

⚠ CAUTION Maximum temperatures are based on mechanical stress only. Certain chemicals will significantly reduce maximum safe operating temperature. Consult the chemical manufacturer for chemical compatibility and temperature limits. Refer to Pump Data on page 1 of this manual.

⚠ CAUTION Be certain all operators of this equipment have been trained for safe working practices, understand it's limitations and wear safety goggles / equipment when required.

⚠ CAUTION Do not use the pump for the structural support of the piping system. Be certain the system components are properly supported to prevent stress on the pump parts.

- Suction and discharge connections should be flexible connections (such as hose), not rigid piped, and should be compatible with the substance being pumped.

⚠ CAUTION Prevent unnecessary damage to the pump. Do not allow pump to operate when out of material for long periods of time.

- Disconnect air line from pump when system sits idle for long periods of time.

NOTICE Replacement warning label pn 92325 and solvent reaction warning tag pn 92769 are available upon request.

⚠ WARNING	=	Hazards or unsafe practices which could result in severe personal injury, death or substantial property damage.
⚠ CAUTION	=	Hazards or unsafe practices which could result in minor personal injury, product or property damage.
NOTICE	=	Important installation, operation or maintenance information.

AIR AND LUBE REQUIREMENTS

⚠WARNING EXCESSIVE AIR PRESSURE. Can cause personal injury, pump damage or property damage. Do not exceed maximum inlet air pressure as stated on pump.

- A filter capable of filtering out particles larger than 50 microns should be used on the air supply. There is no lubrication required other than the "O" ring lubricant which is applied during assembly or repair.
- If lubricated air is present, make sure that it is compatible with the Nitrile "O" rings in the air motor section of the pump.

TRANSPORT AND STORAGE

- Store in a dry place, do not remove product from box during storage.
- Do not remove protection caps from inlet and outlet prior to installation.
- Do not drop or damage box, handle with care.

INSTALLATION

- Secure the diaphragm pump legs to a suitable surface to insure against damage by excessive vibration.
- Pump cycle rate and operating pressure should be controlled by using an air regulator on the air supply.
- The outlet material volume is governed not only by the air supply but also by the material supply available at the inlet. The material supply tubing should not be too small or restrictive. Be sure not to use hose which might collapse.
- Use flexible connections (such as hose) at the suction and discharge, these connections should not be rigid piped and must be compatible with the material being pumped.
- Install a ground wire where applicable.

OPERATING INSTRUCTIONS

NOTICE **Check the tightness of the (29) tie rod nuts after first run in period due to possible compression set of the diaphragm.** If retorquing is required, be sure all pressure has been relieved from the pump and supply lines. Loosen (26) cap screws. Retorque (29) flange nuts to 280 - 300 in. lbs (31.6 - 33.9 Nm). Tighten (26) cap screws to 120 - 140 in. lbs (13.6 - 15.8 Nm).

- Always flush the pump with a solvent compatible with the material being pumped if the material being pumped is subject to "setting up" when not in use for a period of time.
- Disconnect the air supply from the pump if it is to be inactive for a few hours.

START-UP

1. Turn pressure control knob until motor starts to cycle.
2. Allow pump to cycle slowly until it is primed and all air is purged from the fluid hose or dispensing valve.
3. Turn off dispensing valve and allow pump to stall - check all fittings for leakage.
4. Adjust the regulator as required to obtain desired operating pressure and flow.

SHUTDOWN

- It is good practice to periodically flush entire pump system with a solvent that is compatible with the material being pumped, especially if the material being pumped is subject to "settling-out" when not in use for a period of time.
- Disconnect the air supply from the pump if it is to be inactive for a few hours.

SERVICE

- Certain ARO "Smart Parts" are indicated which should be available for fast repair and reduction of down time.
- Provide a clean work surface to protect sensitive internal moving parts from contamination from dirt and foreign matter during service disassembly and reassembly.
- Keep good records of service activity and include pump in preventive maintenance program.
- USE ONLY GENUINE ARO REPLACEMENT PARTS TO ASSURE PERFORMANCE AND PRESSURE RATING.
- Contact your local authorized ARO Service Center for parts and customer service information.
- Service Kits are available to service two separate Diaphragm Pump functions: 1. AIR SECTION, 2. FLUID SECTION. The Fluid Section is divided further to match typical active MATERIAL OPTIONS.

FLUID SECTION SERVICE

GENERAL SERVICE NOTES:

- Clean and inspect each part thoroughly upon disassembly, look for deep scratches on metallic surfaces and nicks, cuts or flat spots on "O" rings. Replace any of the parts that are of questionable condition.
- Upon disassembly, look for any remnants of "O" rings in the air motor valve areas.
- Tools required: 3/16" Allen wrench, 3/8" Allen wrench, 4 mm Allen wrench, 6 mm Allen wrench, 7/16" wrench / socket, 1/2" wrench, 3/4" wrench / socket, 7/8" wrench / socket, 2-1/2" wrench, 13 mm wrench / socket, "O" ring pick, plastic mallet and spanner wrench.

• Teflon® is a registered trademark of the DuPont Company • Key-Lube® is a trademark of Key Industries • Loctite® is a registered trademark of Henkel Loctite Corporation •

FLUID SECTION PARTS

Item	Description (size)	Qty	Part No.	[Mtl]
★	FLUID SECTION SERVICE KIT		637339-( )	
□ 1	Rod	(1)	98724-1	[C]
✓ 2	"O" Ring (3/32" x 3/4" o.d.)	(1)	Y330-113	[B]
★ 3	"O" Ring (3/32" x 11/16" o.d.)	(4)	Y328-112	[T]
□ 5	Plate	(2)	94074-1	[C]
□ 6	Diaphragm Plate	(2)	94055	[SS]
★ 7	Diaphragm	(2)	94800	[T]
9	Washer (1.375" o.d. x 0.505" i.d.)	(2)	93189-1	[SS]
14	Bolt (1/2" - 20 x 1-1/2")	(2)	Y5-87-T	[SS]
15	Fluid Cap	(2)	95191	[SS]
★ 19	"O" Ring (3/32" x 1-9/16" o.d.)	(4)	Y328-126	[T]
★ 21	Seat (PH10A-XSS-SXT)	(4)	90428	[SS]
	(PH10A-XSS-HXT)	(4)	93367-1	[SH]
★ 22	Ball (PH10A-XSS-XST) (1" dia.)	(4)	90948	[SS]
	(PH10A-XSS-XHT) (1" dia.)	(4)	Y16-132	[SH]
26	Cap Screw (M8 x 1.25 x 25 mm)	(8)	95177	[SS]
29	Flange Nut (M8 x 1.25)	(16)	95535	[C]
32	Bracket, Right Side	(2)	94154-1	[C]
	Bracket, Left Side	(2)	94154-2	[C]
□ 36	Manifold (PH10A-ASS-XXT - N.P.T.F.)	(2)	94394	[SS]
	(PH10A-BSS-XXT - BSP)	(2)	94394-1	[SS]
43	Ground Lug	(1)	93004	[Co]
67	Screw (1/4" - 20 x 5/8")	(1)	93860	[SS]

MATERIAL CODE

[B] = Nitrile	[Co] = Copper	[SS] =Stainless Steel
[C] = Carbon Steel	[SH] = Hard Stainless Steel	[T] = Teflon

FLUID SECTION DISASSEMBLY

The following procedure is for the installation of Fluid Section Service Kit parts. Refer to the view on page 5. The items with three digits are on pages 5, 6 and 7.

The steps shown below are for one side, repeat the steps 7 thru 12 to service the other side.

1. Remove four (26) cap screws, releasing (36) top manifold.
2. Remove (22) balls, (19) "O" rings and (21) seats.
3. Remove four (26) cap screws, releasing (36) bottom manifold.
4. Remove (19) "O" rings, (21) seats and (22) balls.
5. Remove eight (29) nuts, releasing (32) brackets.
6. Remove one (15) fluid cap.
7. Using a plastic mallet, tap the (124) tie rods back flush into the auxiliary body.
8. Remove two (158) cap screws, releasing (154 or 155) auxiliary body and diaphragm assembly.
9. Remove (159) "O" ring and one (153) "O" ring.

- SERVICE NOTE: The next few steps relate only to diaphragm disassembly. Further disassembly would not normally be required unless there is damage / wear found on the (148) piston or on the face of the (152) cylinder.

10. Using a spanner wrench to hold the (149) adapter piston and a 3/4" socket on the (14) bolt, remove the (14) bolt, releasing (9) washer, (3) "O" ring, (6) diaphragm plate, (7) diaphragm, (5) plate and (3) "O" ring.
11. Remove the piston assembly and inspect the (151) nut, (148) piston assembly, (150) "O" ring and (149) adapter piston. Do not disassemble further unless damage is evident.
12. Using an "O" ring pick, remove the (165) quad ring and two (164) back-up rings from the (163) bushing.

- SERVICE NOTE: Removal of the (163) bushing should not be necessary, however it must be checked for sharp edges and removed to prevent possible further damage.

FLUID SECTION REASSEMBLY

- Clean all parts upon reassembly. Lubricate all replacement parts and metallic moving parts with Key-Lube grease upon reassembly.
- SERVICE NOTE: Teflon "O" rings are not resilient and they should always be replaced with new ones.

1. Install the (164) back-up ring by pulling it apart, twist or walk it down into the cavity bottom inside the (163) bushing.
2. Install the (165) quad ring on top of the spiral ring by folding it in half allowing it to get past the bushing i.d. and into the cavity.
3. Install the second (164) back-up ring as in step 1. Locate it on top of the quad ring. Lubricate and smooth out the set with your finger to assure good alignment.
4. Place the (9) washer onto the (14) bolt, with the chamfer against the bolt head, place the (3) "O" ring onto the (14) bolt and insert these three parts thru the (6) plate.
5. Place the (7) diaphragm onto this assembly, (see assembly note, page 5).
6. Assemble the (150) "O" ring and (148) piston assembly to the (149) adapter piston, securing with the (151) nut.
7. Lubricate the (152) cylinder wall and insert the piston assembly into the cylinder and through the bushing / quad seal.
8. Apply Loctite #271 to the inner threads of the (149) adapter piston.
9. Place the (3) "O" ring on the end of the (149) adapter piston and slide the (5) plate over it.
10. Thread the piston assembly and diaphragm assembly together. Hold the piston assembly with a spanner wrench, align the diaphragm with the bolt holes and torque the (14) bolt to 49 - 52 ft lbs (66.4 - 70.5 Nm).
11. Install the (159) "O" ring and the (153) large "O" ring. Assembly hint: A liberal amount of Key-Lube grease will hold these in place temporarily.
12. Align the (154 or 155) auxiliary body with the (125) dowel pin and (158) cap screws, and push together, securing with two (158) cap screws.

- CAUTION: The tie rods can tear the diaphragm and ruin it. Hold the diaphragm against the pump body with your fingers when pushing each rod end through.

13. Align the diaphragm with the proper holes in the body and push the rods through far enough to allow installation of the (15) fluid caps. Be certain the flow direction is oriented correctly.
14. Assemble four (29) nuts.
15. Install two (32) brackets, securing with four (29) nuts.

- NOTE: Tighten the fluid cap nuts in a cross pattern alternately and **evenly**. Torque (29) nuts to 280 - 300 in. lbs (31.6 - 33.9 Nm).

16. Assemble (22) balls, (21) seats and (19) "O" rings into the cavity in the bottom of (15) fluid caps.
17. Assemble (36) bottom manifold to fluid caps, securing with (26) cap screws. NOTE: Torque (26) cap screws to 120 - 140 in. lbs (13.6 - 15.8 Nm).
18. Assemble (21) seats, (19) "O" rings and (22) balls into the cavity in the top of (15) fluid caps.
19. Assemble (36) top manifold to fluid caps, securing with (26) cap screws. NOTE: Torque (26) cap screws to 120 - 140 in. lbs (13.6 - 15.8 Nm).

□ "Smart Parts", keep these items on hand in addition to the service kits for fast repair and reduction of down time.

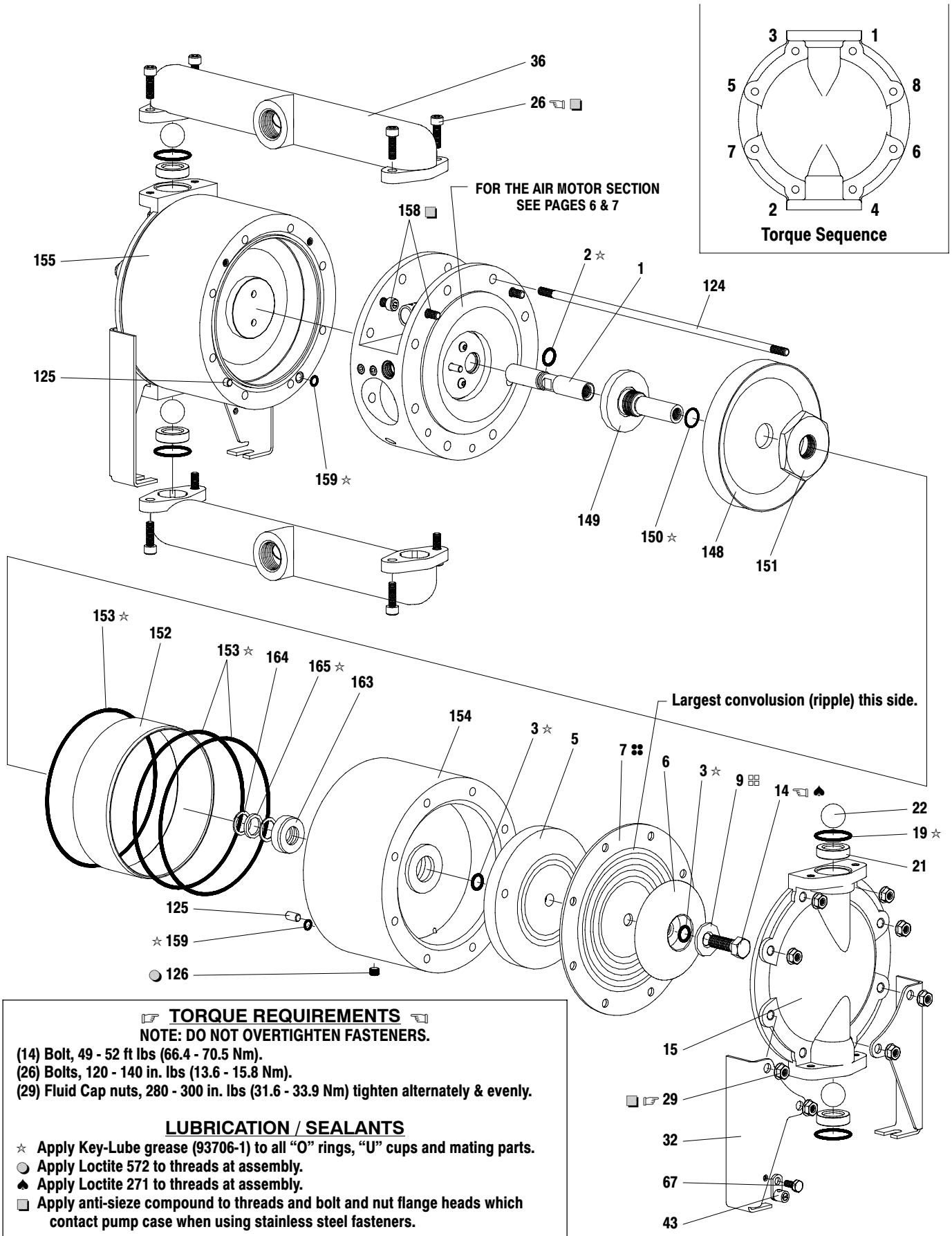

TORQUE REQUIREMENTS

NOTE: DO NOT OVERTIGHTEN FASTENERS.

(14) Bolt, 49 - 52 ft lbs (66.4 - 70.5 Nm).
(26) Bolts, 120 - 140 in. lbs (13.6 - 15.8 Nm).
(29) Fluid Cap nuts, 280 - 300 in. lbs (31.6 - 33.9 Nm) tighten alternately & evenly.

LUBRICATION / SEALANTS

- ☆ **Apply Key-Lube grease (93706-1) to all "O" rings, "U" cups and mating parts.**
- ◯ **Apply Loctite 572 to threads at assembly.**
- ♠ **Apply Loctite 271 to threads at assembly.**
- ❑ **Apply anti-sieze compound to threads and bolt and nut flange heads which contact pump case when using stainless steel fasteners.**

ASSEMBLY NOTES

- ⊞ **Assemble with i.d. chamfer against bolt head.**
- ⁘ **Assemble with largest convolusion (ripple) towards (6) diaphragm plate.**

Figure 2

PARTS LIST / AIR MOTOR SECTION

(✓) Indicates parts included in 637338 Air Section Repair Kit.

Item	Description (size)	Qty	Part No.	Mtl
101	Motor Center Body	(1)	95122-1	[A]
✓ 102	"O" Ring (1/16" x 1" o.d.)	(2)	Y325-20	[B]
□ 103	Sleeve	(1)	94527	[D]
104	Plate	(2)	95125	[SS]
109	Piston	(1)	92011	[D]
✓ 110	"U" Cup (3/16" x 1-3/8" o.d.)	(1)	Y186-51	[B]
111	Spool	(1)	92005	[A]
112	Washer (1.556" o.d.)	(5)	92877	[Z]
✓ 113	"O" Ring (small) (1/8" x 1-1/4" o.d.)	(5)	Y325-214	[B]
✓ 114	"O" Ring (large) (3/32" x 1-9/16" o.d.)	(6)	Y325-126	[B]
115	Spacer	(4)	92876	[Z]
116	Spacer	(1)	92006	[Z]
□ 118	Actuator Pin	(2)	95126	[SS]
□ 121	Plug	(2)	95123	[D]
123	Button Head Screw (M6 x 1 x 12 mm)	(4)	95176	[C]
124	Tie Rod	(8)	95195	[SH]
125	Dowel Pin (5/16" o.d. x 5/8")	(2)	Y148-45	[C]
126	Pipe Plug (1/8 - 27 N.P.T.)	(10)	Y227-2-L	[C]
127	Street Elbow	(1)	94763	[Br]
136	Plug	(2)	94075	[SS]
✓ 137	"O" Ring (1/16" x 1-7/8" o.d.)	(2)	Y325-31	[B]
148	Piston Assembly	(2)	61419	[B]
149	Adapter Piston	(2)	94073-1	[C]
✓ 150	"O" Ring (1/16" x 1-3/16" o.d.)	(2)	Y325-23	[B]
□ 151	Nut	(2)	94072	[C]

Item	Description (size)	Qty	Part No.	Mtl
152	Cylinder	(2)	94801	[Fg]
✓★153	"O" Ring (1/8" x 6-1/2" o.d.)	(6)*	Y325-259	[B]
154	Auxiliary Body – Right	(1)	94750-1	[A]
155	Auxiliary Body – Left	(1)	94751-1	[A]
158	Cap Screw (M8 x 1.25 x 25 mm)	(4)	95177	[SS]
✓ 159	"O" Ring (1/16" x 7/16" o.d.)	(2)	Y325-11	[B]
163	Bushing	(2)	94053	[Bz]
✓★164	Back-Up Ring (3/4" i.d. x 1" o.d.)	(4)	Y118-210	[T]
✓★165	Quad Ring	(2)	94050	[B]
✓ 167	Pilot Piston (includes 168 and 169)	(1)	67164	[D]
168	"O" Ring (3/32" x 5/8" o.d.)	(2)	94433	[U]
169	"U" Cup (1/8" x 7/8" o.d.)	(1)	Y240-9	[B]
170	Piston Sleeve	(1)	94081	[Br]
✓ 171	"O" Ring (3/32" x 1-1/8" o.d.)	(1)	Y325-119	[B]
✓ 172	"O" Ring (1/16" x 1-1/8" o.d.)	(1)	Y325-22	[B]
✓ 173	"O" Ring (3/32" x 1-3/8" o.d.)	(2)	Y325-123	[B]
✓ 174	"U" Cup (1/8" x 1/2" o.d.)	(2)	Y186-43	[B]
201	Muffler	(1)	93110	[C]
✓ ★	Key-Lube "O" Ring Lubricant	(1)	93706-1	
	10 Pack Key-Lube Grease		637175	

MATERIAL CODE

[A] = Aluminum	[C] = Carbon Steel	[SS] = Stainless Steel
[B] = Nitrile	[D] = Acetal	[T] = Teflon
[Br] = Brass	[Fg] = Fiberglas	[U] = Polyurethane
[Bz] = Bronze	[SH] = Hard Stainless Steel	[Z] = Zinc

AIR SECTION SERVICE

GENERAL SERVICE NOTES:
Service is divided into two parts – 1. Pilot Valve, 2. Major Valve.

- Air Motor Section Service is continued from step 8 of the Fluid Section Disassembly.
- It is not necessary to remove the Fluid Section Ends to gain access to the Air Motor Major Valve Section.
- In most cases, problems of an air control nature will reside in the Air Valve area.
- Removal of the Fluid Sections is required to install all of the parts included in the Air Section Service Kit, if this is the case, follow steps 1 thru 8 of the Fluid Section Disassembly on both sides and isolate the Air Section.
- * SERVICE KIT NOTE: Only two replacement "O" rings are supplied in the 637338 and 637339-( ) kits.

PILOT VALVE DISASSEMBLY

- NOTE: Both outer pump Fluid Sections must be removed to access the Pilot Section parts (see figure 3, page 7).

1. Remove two (123) screws and (104) plate from both sides of the (101) motor center body.
2. A light tap on (118) actuator pin should expose the opposite (121) plug and (167) pilot piston.
3. Remove (170) piston sleeve and inspect the inner bore for damage.

PILOT VALVE REASSEMBLY

- Lubricate all soft parts, spool and bores with Key-Lube grease upon reassembly.

1. Assemble the trailing (102) "O" ring to (103) sleeve and assemble sleeve into motor center body, pushing thru far enough to expose "O" ring groove on opposite end.
2. Assemble (102) "O" ring to (103) sleeve and push sleeve onto motor center body.
3. Assemble (2) "O" ring to (1) rod and assemble into (103) sleeve.
4. Assemble (171 and 172) "O" rings to (170) piston sleeve and assemble into (101) center body. NOTE: Assemble sleeve with small i.d. into center body.
5. Assemble two (168) "O" rings and (169) "U" cup to (167) pilot piston (note the lip direction of "U" cup) and assemble into (170) piston sleeve.
6. Assemble (173) "O" rings and (174) "U" cups (note lip direction) to (121) plugs.
7. Assemble (118) actuator pins to (121) plugs and assemble (121) plugs into (101) center body.
8. Assemble (104) plates to (101) center body, securing with (123) screws.
9. Reassemble fluid section parts.

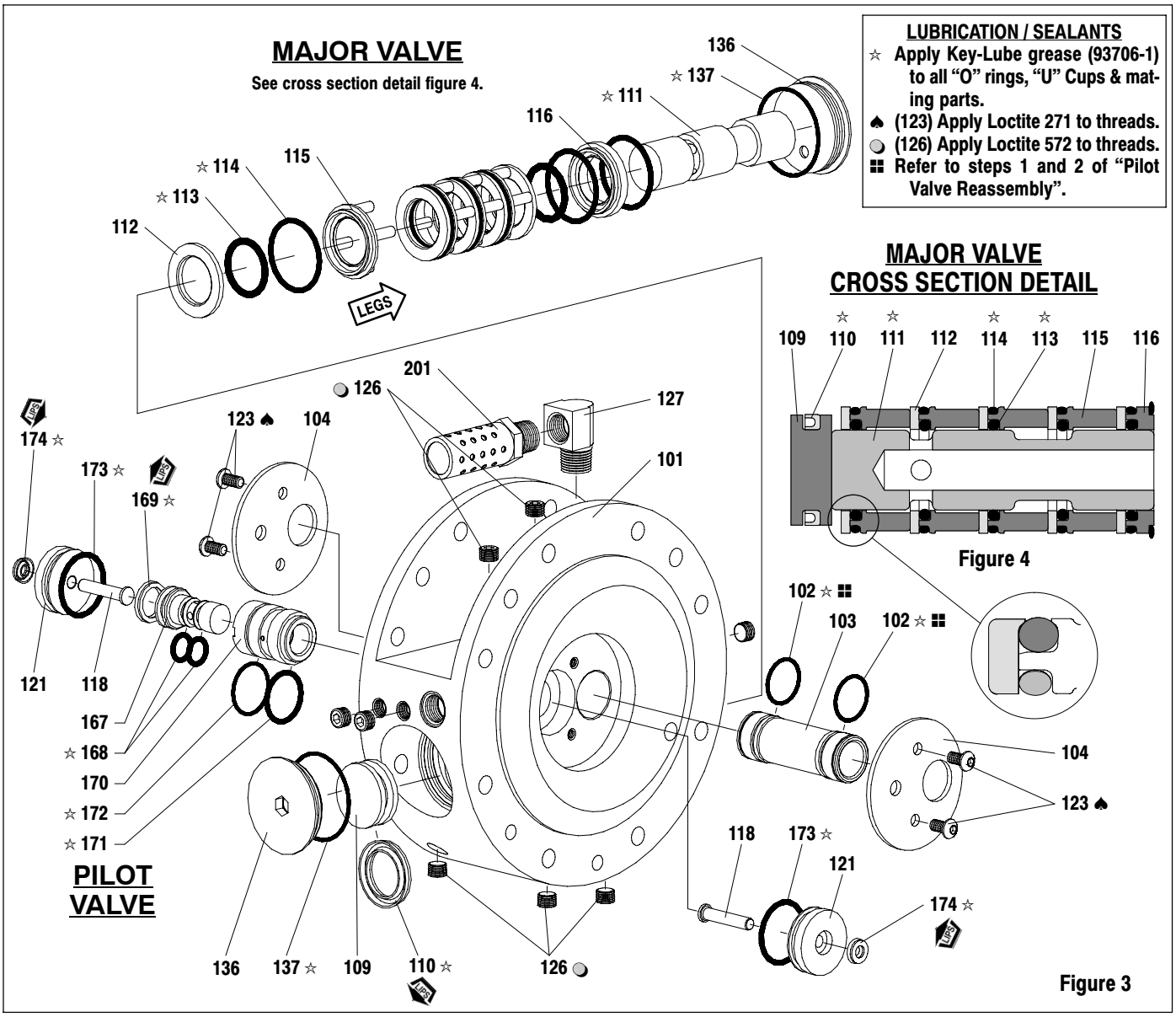

Figure 3

MAJOR VALVE DISASSEMBLY

1. Remove the two (124) tie rods blocking the (136) plugs.
2. Using a 3/8" Allen wrench, remove both (136) plugs. Check the (137) "O" rings and make certain they are intact and undamaged. Fragments of "O" rings can cause the pump to malfunction.
3. From the air inlet side (use a large dowel and soft mallet) tap moderately on the (109) piston and then push the entire valve stack out the opposite side. Clean and inspect all parts for damage and wear.

MAJOR VALVE REASSEMBLY

- Lubricate all soft parts, spool, and bores with Key-Lube grease upon reassembly.

1. For best results, rebuild the Major Valve stack one piece at a time. Start with the (112) washer and install it in the side opposite the air inlet. Place the washer into the bore with the raised edge facing outward, follow it with the larger (114) "O" ring.
2. Place (113) "O" ring on the (115) spacer, insert the spacer with the legs facing outward, <u>be sure not to block the internal ports with the spacer legs</u>. Repeat this process three times and make certain each set is pressed in well.
3. Install the last (112) washer and a (114) "O" ring, place the last (113) "O" ring on the (116) spacer and install. Install the last (114) "O" ring.
4. Lubricate the (111) spool and install (this is the side opposite of the air inlet). Note: The end with the hole in it faces outward.
5. Install a new (137) "O" ring on the (136) plug and thread it into the (101 motor center body.

- Note: Align plug carefully and take care not to damage "O" rings.

6. Assemble the (110) "U" cup to the (109) piston and install it into the air inlet side with the lips facing outward.
7. Install new (137) "O" ring on the (136) plug and install into the (101) motor center body.
8. Assemble (124) tie rods, securing with (29) nuts. NOTE: Torque (29) nuts to 280 - 300 in. lbs (31.6 - 33.9 Nm).

TROUBLE SHOOTING

Product discharged from air exhaust.
- Check for diaphragm rupture.
- Check tightness of bolt (14).

Air bubbles in product discharge.
- Check connections of suction plumbing.
- Check “O” rings between intake manifold and fluid caps.
- Check tightness of bolt (14).

Pump blows air out main exhaust when stalled on either stroke, a typical cause of pump malfunction can be attributed to problems with “O” rings.
- Segments of broken “O” rings can move around or lodge in areas of the Air Motor valve section.
- Swollen “O” rings can cause valve parts to stick or seize. Solvents can ruin the “O” rings.
  - Do not use contaminated air supply.
  - Do not use light weight oil in air supply, it will wash the Key-Lube grease out of the Air Motor Section.
  - Do not use air line additives containing solvents.
  - Do not spray pump off with solvents, wipe clean only.
- Check “O” rings on (111) spool in major valve.
- Check (103) sleeve and (2) “O” ring on (1) rod.
- Check (168) “O” rings on (167) pilot piston for wear.

Low output volume.
- Check air supply.
- Check for plugged outlet hose.
- For the pump to prime itself, it must be mounted in the vertical position so that the balls will check by gravity.
- Check for pump cavitation – suction pipe should be 1” minimum or larger if high viscosity fluids are being pumped. Suction hose must be non-collapsible type, capable of pulling a high vacuum.
- Check all joints on intake manifolds and suction connections. These must be airtight.
- Check for sticking or improperly seating check valves.
- If pump cycles at a high rate or runs erratically, check (168) “O” rings for wear.

DIMENSIONAL DATA

Dimensions shown are for reference only, they are shown in inches and millimeters (mm).

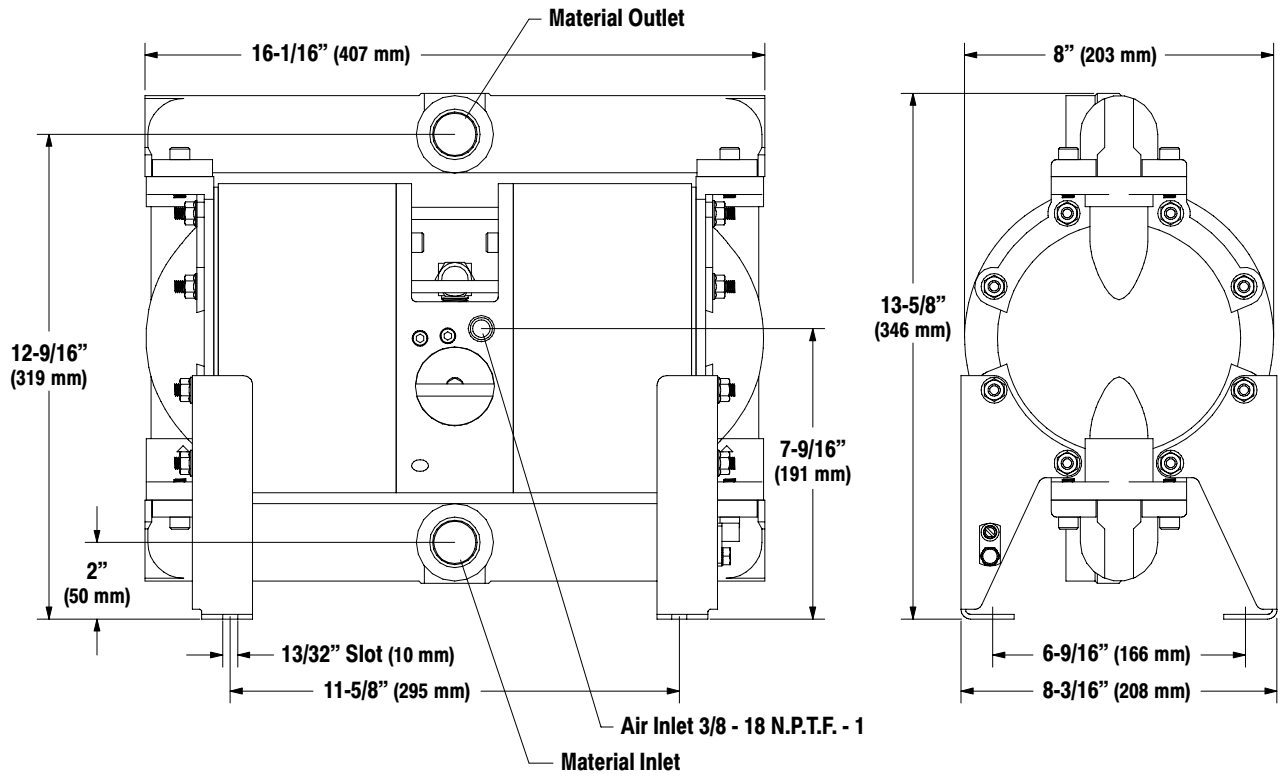

	Material Inlet	Material Outlet
PH10A-ASS-XXT	1 - 11-1/2 N.P.T.F. - 1	1 - 11-1/2 N.P.T.F. - 1
PH10A-BSS-XXT	Rp 1 (1 - 11 BSP parallel)	Rp 1 (1 - 11 BSP parallel)

Figure 5