OPERATOR'S MANUAL PF20R-X-B

INCLUDING: OPERATION, INSTALLATION & MAINTENANCE

RELEASED: 12-14-04
REVISED: 3-18-05
(REV. 02)

2" DIAPHRAGM PUMP

1:1 RATIO FLAP VALVE (METALLIC)

READ THIS MANUAL CAREFULLY BEFORE INSTALLING, OPERATING OR SERVICING THIS EQUIPMENT.

It is the responsibility of the employer to place this information in the hands of the operator. Keep for future reference.

SERVICE KITS

Refer to Model Description Chart to match the pump material options.
637369 for air section repair (see page 6).
637310-XX for fluid section repair (see page 3).
637374 major air valve assembly (see page 7).

PUMP DATA

Models . . see Model Description Chart for "-XXX".
Pump Type Metallic, Air Operated, Double Diaphragm, Flap Valve
Material . . see Model Description Chart.
Weight . . . PF20X-XCX-SXX-B . . . . . 178.7 lbs (81.1 kgs)
PF20X-XSX-SXX-B . . . . . 180.6 lbs (81.9 kgs)
Maximum Air Inlet Pressure . . . . . 120 p.s.i.g. (8.3 bar)
Maximum Material Inlet Pressure . . . . . 10 p.s.i.g. (0.69 bar)
Maximum Outlet Pressure . . . . . 120 p.s.i.g. (8.3 bar)
Maximum Flow Rate . . . . . 172 g.p.m. (651 l.p.m.)
Displacement / Cycle @ 100 p.s.i.g. . . . 1.4 gal. (5.3 lit.)
Maximum Particle Size . . . . . 2" dia. (51 mm) semi-solids
Maximum Temperature Limits (diaphragm / flap / bumper material)
E.P.R. / EPDM . . . . . -60° to 280° F (-51° to 138° C)
Nitrile . . . . . 10° to 180° F (-12° to 82° C)
Polyurethane . . . . . 10° to 150° F (-12° to 66° C)
Santoprene® . . . . . -40° to 225° F (-40° to 107° C)
T.F.E. (Teflon®) . . . . . 40° to 225° F (4° to 107° C)
Viton® . . . . . -40° to 350° F (-40° to 177° C)
Dimensional Data . . . . . see page 8
Mounting Dimension . . . . . 9-1/16" x 10-1/16" (230 mm x 256 mm)
Noise Level @ 70 p.s.i., 60 c.p.m.① . . . . 85.0 db(A)②

① Tested with 67263 muffler assembly installed.
② The pump sound pressure levels published here have been updated to an Equivalent Continuous Sound Level (L_{Aeq}) to meet the intent of ANSI S1.13-1971, CAGI-PNEUROP S5.1 using four microphone locations.

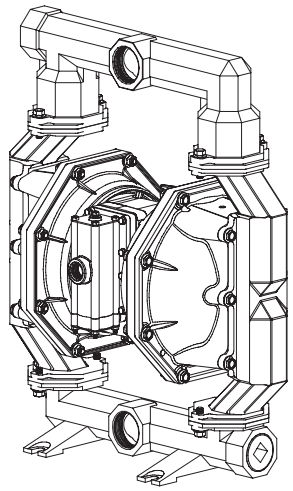

Figure 1

MODEL DESCRIPTION CHART

PF20 X - X X X - S X X - B

AIR MOTOR / AIR CAP MATERIAL
R - Polypropylene / Stainless Steel
Y - Polypropylene / Cast Iron

THREAD
A - N.P.T.F.
B - BSP

FLUID CAPS & MANIFOLD MATERIAL
C - Cast Iron
S - Stainless Steel

HARDWARE MATERIAL
P - Plated Steel
S - Stainless Steel

SEAT MATERIAL
S - Stainless Steel

FLAP MATERIAL
A - E.P.R. U - Polyurethane
G - Nitrile V - Viton

DIAPHRAGM MATERIAL
A - Santoprene T - Teflon / Santoprene
G - Nitrile V - Viton

FLUID SECTION SERVICE KIT SELECTION PF20X - XXX - S X X - B
EXAMPLE: MODEL # PF20R-ACP-SAA-B 637310 - X X
FLUID SECTION SERVICE KIT # 637310-AA Flap Diaphragm

INGERSOLL-RAND COMPANY
P.O. BOX 151 • ONE ARO CENTER • BRYAN, OHIO 43506-0151
(800) 276-4658 • FAX (800) 266-7016
©2005
CCN 15227671

ARO® Ingersoll-Rand

OPERATING AND SAFETY PRECAUTIONS

READ, UNDERSTAND, AND FOLLOW THIS INFORMATION TO AVOID INJURY AND PROPERTY DAMAGE.

EXCESSIVE AIR PRESSURE
STATIC SPARK

HAZARDOUS MATERIALS
HAZARDOUS PRESSURE

⚠ WARNING EXCESSIVE AIR PRESSURE. Can cause personal injury, pump damage or property damage.

- Do not exceed the maximum inlet air pressure as stated on the pump model plate.
- Be sure material hoses and other components are able to withstand fluid pressures developed by this pump. Check all hoses for damage or wear. Be certain dispensing device is clean and in proper working condition.

⚠ WARNING STATIC SPARK. Can cause explosion resulting in severe injury or death. Ground pump and pumping system.

- Use the pump grounding screw terminal provided. Use ARO part no. 66885-1 ground kit or connect a suitable ground wire (12 ga. min.) to a good earth ground source.
- Secure pump, connections and all contact points to avoid vibration and generation of contact or static spark.
- Consult local building codes and electrical codes for specific grounding requirements.
- After grounding, periodically verify continuity of electrical path to ground. Test with an ohmmeter from each component (e.g., hoses, pump, clamps, container, spray gun, etc.) to ground to insure continuity. Ohmmeter should show 0.1 ohms or less.
- Submerse the outlet hose end, dispensing valve or device in the material being dispensed if possible. (Avoid free streaming of material being dispensed.)
- Use hoses incorporating a static wire.
- Use proper ventilation.
- Keep inflammables away from heat, open flames and sparks.
- Keep containers closed when not in use.

⚠ WARNING Pump exhaust may contain contaminants. Can cause severe injury. Pipe exhaust away from work area and personnel.

- In the event of a diaphragm rupture, material can be forced out of the air exhaust muffler.
- Pipe the exhaust to a safe remote location when pumping hazardous or inflammable materials.
- Use a grounded 1” minimum i.d. hose between the pump and the muffler.

⚠ WARNING HAZARDOUS PRESSURE. Can result in serious injury or property damage. Do not service or clean pump, hoses or dispensing valve while the system is pressurized.

- Disconnect air supply line and relieve pressure from the system by opening dispensing valve or device and / or carefully and slowly loosening and removing outlet hose or piping from pump.

⚠ WARNING HAZARDOUS MATERIALS. Can cause serious injury or property damage. Do not attempt to return a pump to the factory or service center that contains hazardous material. Safe handling practices must comply with local and national laws and safety code requirements.

- Obtain Material Safety Data Sheets on all materials from the supplier for proper handling instructions.

⚠ WARNING EXPLOSION HAZARD. Models containing aluminum wetted parts cannot be used with III.-Trichloroethane, Methylene Chloride or other Halogenated Hydrocarbon solvents which may react and explode.

- Check pump motor section, fluid caps, manifolds and all wetted parts to assure compatibility before using with solvents of this type.

⚠ WARNING MISAPPLICATION HAZARD. Do not use models containing aluminum wetted parts with food products for human consumption. Plated parts can contain trace amounts of lead.

⚠ CAUTION Verify the chemical compatibility of the pump wetted parts and the substance being pumped, flushed or recirculated. Chemical compatibility may change with temperature and concentration of the chemical(s) within the substances being pumped, flushed or circulated. For specific fluid compatibility, consult the chemical manufacturer.

⚠ CAUTION Maximum temperatures are based on mechanical stress only. Certain chemicals will significantly reduce maximum safe operating temperature. Consult the chemical manufacturer for chemical compatibility and temperature limits. Refer to PUMP DATA on page 1 of this manual.

⚠ CAUTION Be certain all operators of this equipment have been trained for safe working practices, understand it’s limitations, and wear safety goggles / equipment when required.

⚠ CAUTION Do not use the pump for the structural support of the piping system. Be certain the system components are properly supported to prevent stress on the pump parts.

- Suction and discharge connections should be flexible connections (such as hose), not rigid piped, and should be compatible with the substance being pumped.

⚠ CAUTION Prevent unnecessary damage to the pump. Do not allow pump to operate when out of material for long periods of time.

- Disconnect air line from pump when system sits idle for long periods of time.

⚠ CAUTION Use only genuine ARO replacement parts to assure compatible pressure rating and longest service life.

NOTICE Replacement warning labels are available upon request: “Static Spark & Diaphragm Rupture” pn \ 94080.

⚠ WARNING	=	Hazards or unsafe practices which could result in severe personal injury, death or substantial property damage.
⚠ CAUTION	=	Hazards or unsafe practices which could result in minor personal injury, product or property damage.
NOTICE	=	Important installation, operation or maintenance information.

GENERAL DESCRIPTION

The ARO diaphragm pump offers high volume delivery even at low air pressure and a broad range of material compatibility options available. Refer to the model and option chart. ARO pumps feature stall resistant design, modular air motor / fluid sections.

Air operated double diaphragm pumps utilize a pressure differential in the air chambers to alternately create suction and positive fluid pressure in the fluid chambers, flap checks insure a positive flow of fluid.

Pump cycling will begin as air pressure is applied and it will continue to pump and keep up with the demand. It will build and maintain line pressure and will stop cycling once maximum line pressure is reached (dispensing device closed) and will resume pumping as needed.

AIR AND LUBE REQUIREMENTS

⚠ WARNING EXCESSIVE AIR PRESSURE. Can cause pump damage, personal injury or property damage.

- A filter capable of filtering out particles larger than 50 microns should be used on the air supply. There is no lubrication required other than the "O" ring lubricant which is applied during assembly or repair.
- If lubricated air is present, make sure that it is compatible with the Nitrile "O" rings in the air motor section of the pump.

OPERATING INSTRUCTIONS

- Always flush the pump with a solvent compatible with the material being pumped if the material being pumped is subject to "setting up" when not in use for a period of time.
- Disconnect the air supply from the pump if it is to be inactive for a few hours.
- The outlet material volume is governed not only by the air supply but also by the material supply available at the inlet. The material supply tubing should not be too small or restrictive. Be sure not to use hose which might collapse.
- When the diaphragm pump is used in a forced-feed (flooded inlet) situation, it is recommended that a "Check Valve" be installed at the air inlet.
- Secure the diaphragm pump legs to a suitable surface to insure against damage by vibration.

PARTS AND SERVICE KITS

Refer to the part views and descriptions as provided on page 4 through 7 for parts identification and Service Kit information.

- Certain ARO "Smart Parts" are indicated which should be available for fast repair and reduction of down time.
- Service kits are divided to service two separate diaphragm pump functions: 1. AIR SECTION, 2. FLUID SECTION. The FLUID SECTION is divided further to match typical part MATERIAL OPTIONS.

MAINTENANCE

- Provide a clean work surface to protect sensitive internal moving parts from contamination from dirt and foreign matter during service disassembly and reassembly.
- Keep good records of service activity and include pump in preventive maintenance program.
- Before disassembling, empty captured material in the outlet manifold by turning the pump upside down to drain material from the pump.

FLUID SECTION DISASSEMBLY

1. Remove (61) top manifold, (60) bottom manifold and (53) manifold elbow.
2. Remove the flap valve cartridge / seat assemblies.
3. Remove (15) fluid caps.

NOTE: Only Teflon diaphragm models use a primary diaphragm (7) and a backup diaphragm (8). Refer to the auxiliary view in the Fluid Section illustration.

4. Remove the (6) diaphragm washer, (7) diaphragm and (5) backup washer.

NOTE: Do not scratch or mar the surface of (1) diaphragm rod.

FLUID SECTION REASSEMBLY

- Reassemble in reverse order. Refer to the torque requirements on page 5.
- Clean and inspect all parts. Replace worn or damaged parts with new parts as required.
- Lubricate (1) diaphragm rod and (144) "U" cup with Lubriplate® FML-2 grease (94276 grease packet is included in service kit).
- For models with Teflon diaphragms: Item (8) Santoprene diaphragm is installed with the side marked "AIR SIDE" towards the pump center body. Install the Teflon diaphragm (7) with the side marked "FLUID SIDE" towards the (15) fluid cap.
- Re-check torque settings after pump has been re-started and run a while.

Teflon® and Viton® are trademarks of the DuPont Company, • Kynar® is a registered trademark of Penwalt Corp.
Santoprene® is a registered trademark of Monsanto Company, licensed to Advanced Elastomer Systems, L.P. • Lubriplate® is a registered trademark of Lubriplate Division (Fiske Brothers)

FLUID SECTION SERVICE KITS (637310-XX)

★ **KITS INCLUDE: DIAPHRAGMS (See Diaphragm Option, refer to -XX in chart below), Flap Valve items (47), (48), (51) and (55), plus items (44), (46), (70), (75), (144) and (175) listed below, plus (174) and a (94276) Lubriplate FML-2 grease packet.**

FLAP VALVE OPTIONS PF20X-XXX-SXX-B

	★ "47"			★ "48"			★ "51"			★ "55"		
-XXX	Bumper	Qty	[Mtl]	Flap	Qty	[Mtl]	Gasket	Qty	[Mtl]	Gasket	Qty	[Mtl]
-XAX	93197-5	(4)	[E]	93196-5	(4)	[E]	94365-1	(4)	[E]	94364-1	(4)	[E]
-XGX	93197-2	(4)	[B]	93196-2	(4)	[B]	94365-2	(4)	[B]	94364-2	(4)	[B]
-XUX	93197-5	(4)	[E]	93070	(4)	[U]	94365-1	(4)	[E]	94364-1	(4)	[E]
-XVX	93197-3	(4)	[V]	93196-3	(4)	[V]	94365-3	(4)	[V]	94364-3	(4)	[V]

MATERIAL CODE

[B] = Nitrile
[C] = Carbon Steel
[Co] = Copper
[CI] = Cast Iron
[E] = E.P.R.
[SP] = Santoprene
[SS] = Stainless Steel
[T] = Teflon
[U] = Polyurethane
[V] = Viton

SEAT OPTIONS PF20X-XXX-XXX-B

	"49"		
-XXX	Seat	Qty	[Mtl]
-SXX	94366	(4)	[SS]

DIAPHRAGM OPTIONS PF20X-XXX-SXX-B

	★ SERVICE KIT	★ "7"			★ "8"		
-XXX	-XX = (Flap Valve) -XX = (Diaphragm)	Diaphragm	Qty	[Mtl]	Diaphragm	Qty	[Mtl]
-XXA	637310-XA	94329-A	(2)	[SP]	-----	---	---
-XXG	637310-XG	94329-G	(2)	[B]	-----	---	---
-XXT	637310-XT	94355-T	(2)	[T]	94330-A	(2)	[SP]
-XXV	637310-XV	95344	(2)	[V]	-----	---	---

MANIFOLD THREAD / FLUID CAP MATERIAL OPTIONS PF20X-XXX-SXX-B

			Cast Iron				Stainless Steel			
			PF20X-ACX-SXX-B (N.P.T.F.)		PF20X-BCX-SXX-B (B.S.P.)		PF20X-ASX-SXX-B (N.P.T.F.)		PF20X-BSX-SXX-B (B.S.P.)	
Item	Description (size)	Qty	Part No.	[Mtl]	Part No.	[Mtl]	Part No.	[Mtl]	Part No.	[Mtl]
15	Fluid Cap	(2)	94359	[CI]	94359	[CI]	95560	[SS]	95560	[SS]
53	Manifold Elbow	(2)	94362	[CI]	94362	[CI]	95563	[SS]	95563	[SS]
60	Bottom Manifold	(1)	94347-1	[CI]	94347-2	[CI]	95510-1	[SS]	95510-2	[SS]
61	Top Manifold	(1)	94348-1	[CI]	94348-2	[CI]	95511-1	[SS]	95511-2	[SS]
63	Pipe Plug (2 - 11-1/2 N.P.T.)	(2)	Y17-28-C	[C]	-----	---	-----	---	-----	---
	(R-2, 2 - 11 BSP)	(2)	-----	---	94439-1	[C]	-----	---	-----	---
80	Pipe Plug (1/8 - 27 N.P.T.F.)	(2)	Y227-2-L	[C]	Y227-2-L	[C]	Y17-50-S	[SS]	Y17-50-S	[SS]

EXTERNAL HARDWARE OPTION PF20X-XXX-SXX-B

			PF20X-XXP-SXX-B		PF20X-XXS-SXX-B	
Item	Description (size)	Qty	Part No.	[Mtl]	Part No.	[Mtl]
26	Screw (M10 x 1.5 - 6g x 35 mm)	(20)	94409-1	[C]	94409-2	[SS]
27	Screw (M10 x 1.5 - 6g x 45 mm)	(16)	94990-1	[C]	94990	[SS]
29	Nut (M10 x 1.5 - 6g)	(16)	94992-1	[C]	94992	[SS]

COMMON PARTS

Item	Description (size)	Qty	Part No.	[Mtl]
□ 1	Rod	(1)	94358	[C]
5	Backup Washer	(2)	94357-2	[SS]
□ 6	Diaphragm Washer	(2)	94357-2	[SS]
9	Washer	(2)	93065	[SS]
14	Screw (5/8" - 18 x 2-1/2")	(2)	Y5-111-T	[SS]
★ 44	Screw	(8)	94408	[SS]
★ 46	Bracket	(4)	93192	[SS]
68	Air Cap (models PF20R-X-X-B)	(1)	94349-1	[SS]
	(models PF20Y-X-X-B)	(1)	94345-1	[CI]

Item	Description (size)	Qty	Part No.	[Mtl]
69	Air Cap (models PF20R-X-X-B)	(1)	94349-2	[SS]
	(models PF20Y-X-X-B)	(1)	94345-2	[CI]
★ ✓ 70	Gasket	(2)	94100	[B]
★ 75	Plate	(4)	94620	[SS]
126	Pipe Plug (1/4 - 18 N.P.T. x 7/16")	(2)	Y17-51-S	[SS]
131	Screw (M10 x 1.5 - 6g x 120 mm)	(4)	94531	[C]
★✓144	"U" Cup (3/16" x 1-3/8" o.d.)	(2)	Y186-51	[B]
★✓175	"O" Ring (3/32" x 1" o.d.)	(2)	Y325-117	[B]
✓ 180	Washer (0.406" i.d. x 0.031" thick)	(4)	94098	[Co]
181	Roll Pin (5/32" o.d. x 3/4" long)	(4)	Y178-56-S	[SS]

□ "Smart Parts" keep these items on hand in addition to the service kits for fast repair and reduction of down time.

✓ Air Motor Kit Parts, see page 6.

FOR THE AIR MOTOR SECTION SEE PAGES 6 & 7

COLOR CODE			
MATERIAL	DIAPHRAGM COLOR	FLAP COLOR	BUMPER COLOR
E.P.R.	–	Blue (•)	Blue (•)
Nitrile	Black	Red (•)	Red (•)
Santoprene	Tan	–	–
Santoprene (Backup)	Green	–	–
T.F.E. (Teflon)	White	–	–
Urethane	–	Red	–
Viton	Yellow (–) (–) Dash	Yellow (•) (•) Dot	Yellow (•)

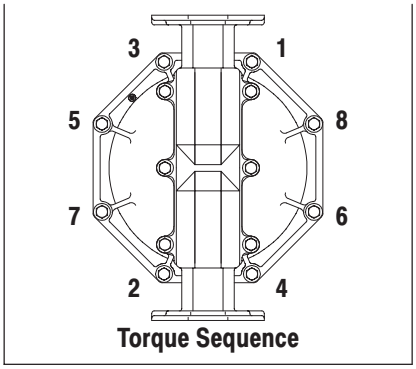

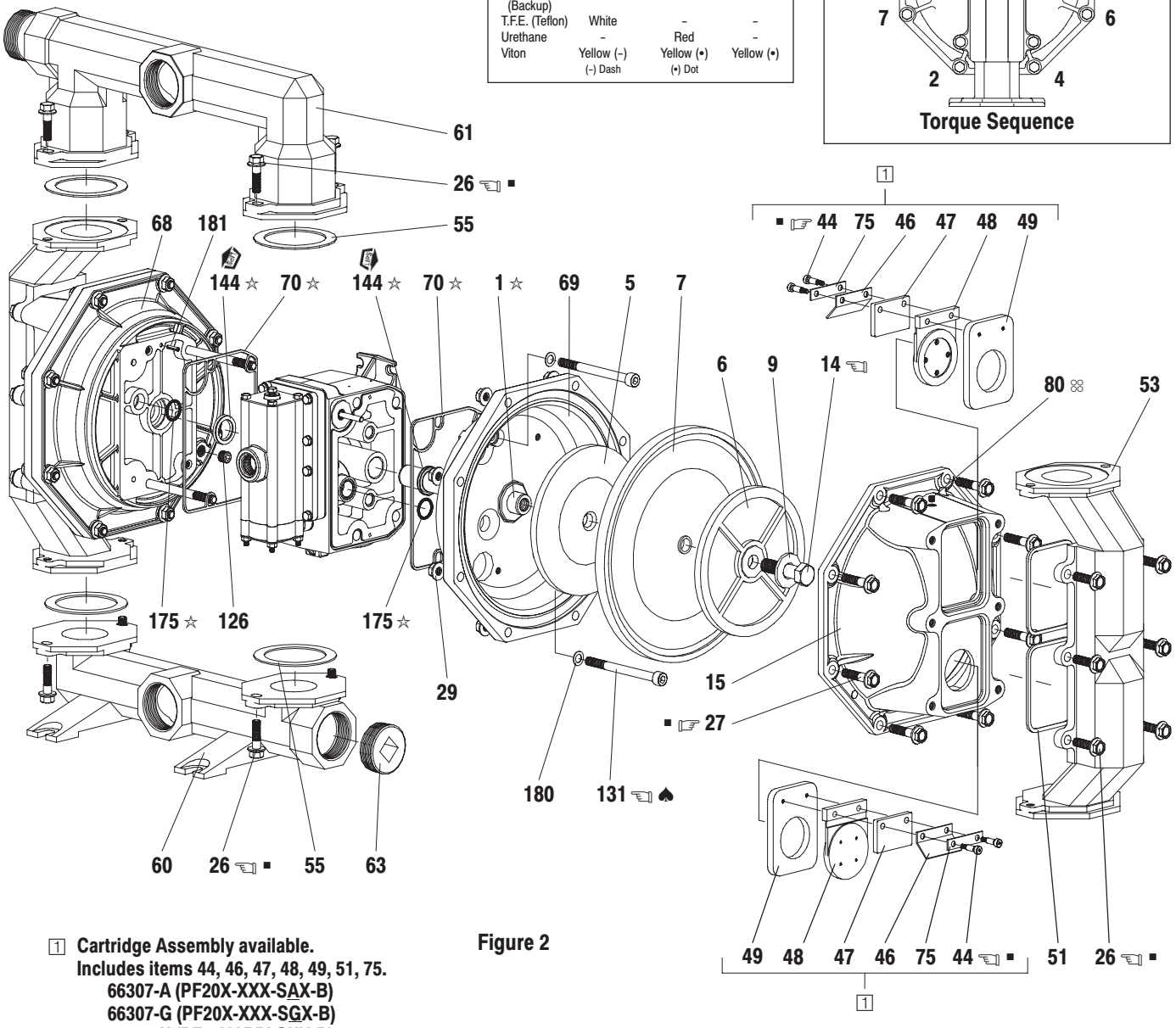

Figure 2

1 Cartridge Assembly available.
Includes items 44, 46, 47, 48, 49, 51, 75.
66307-A (PF20X-XXX-SAX-B)
66307-G (PF20X-XXX-SGX-B)
66307-U (PF20X-XXX-SUX-B)
66307-V (PF20X-XXX-SVX-B)

VIEW OF TWO PIECE TEFLON DIAPHRAGM

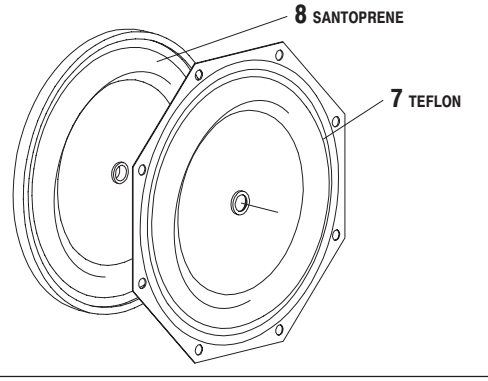

☞ TORQUE REQUIREMENTS ☜

NOTE: DO NOT OVERTIGHTEN FASTENERS.
ALL FASTENERS ARE METRIC.

(14) Diaphragm screw, apply Loctite #271 to threads, torque to 65 - 70 ft lbs (88.1 - 94.9 Nm).
(26 and 27) Fluid caps / manifold screw, 30 - 40 ft lbs (40.7 - 54.2 Nm).
(44) Screw, 50 - 60 in. lbs (5.6 - 6.8 Nm).
(131) Screw, 35 - 40 ft lbs (47.5 - 54.2 Nm).
▪ Apply anti-seize compound to threads when using stainless steel fasteners and stainless steel wet ends.

LUBRICATION / SEALANTS

☆ Apply Lubriplate FML-2 grease to all "O" rings, "U" Cups & mating parts.
♠ Apply Loctite 242 to threads at assembly.
⌘ Apply Loctite 503 pipe sealant.

◇ Lubriplate FML-2 is a white food grade petroleum grease.

PARTS LIST / PF20X-X-X-B AIR SECTION

✓ **Indicates parts included in 637369 Air Section Service Kit shown below and items (70), (144), (175), (180) shown on page 4.**

AIR MOTOR PARTS

Item	Description (size)	Qty	Part No.	[Mtl]
101	Center Body	(1)	95667	[P]
103	Bushing	(1)	94092	[D]
105	Screw (M6 x 1 - 6g x 180 mm)	(4)	95921	[SS]
107	End Plate	(2)	95846	[SS]
111	Spool	(1)	95651	[D]
118	Actuator Pin (0.250" x 2.276" long)	(2)	94083	[SS]
121	Sleeve	(2)	94084	[D]
◯ 127	90° St. Elbow (1-1/2 - 11-1/2 N.P.T.)	(1)	94860	[C / I]
✓ 132	Gasket	(1)	94099	[B]
133	Washer (M6)	(8)	95931	[SS]
134	Screw (M6 x 1 - 6g x 35 mm)	(8)	95923	[SS]
135	Valve Block	(1)	95789	[P]
136	End Cap	(1)	95790	[P]
✓ 137	"O" Ring (1/16" x 2" o.d.)	(1)	Y325-32	[B]
✓ 138	"U" Cup (3/16" x 1.792" o.d.)	(1)	95966	[B]
✓ 139	"U" Cup (3/16" x 1-1/4" o.d.)	(1)	Y186-50	[B]
140	Valve Insert	(1)	95650	[Ck]
141	Valve Plate	(1)	95659	[Ck]
✓ 166	Track Gasket	(1)	94026	[B]
✓ 167	Pilot Piston (includes 168 and 169)	(1)	67164	[D]
168	"O" Ring (3/32" x 5/8" o.d.)	(2)	94433	[U]
169	"U" Cup (1/8" x 7/8" o.d.)	(1)	Y240-9	[B]

Item	Description (size)	Qty	Part No.	[Mtl]
170	Piston Sleeve	(1)	94081	[Br]
✓ 171	"O" Ring (3/32" x 1-1/8" o.d.)	(1)	Y325-119	[B]
✓ 172	"O" Ring (1/16" x 1-1/8" o.d.)	(1)	Y325-22	[B]
✓ 173	"O" Ring (1/16" x 1-3/8" o.d.)	(2)	Y325-26	[B]
★✓ 174	"O" Ring (1/8" x 1/2" o.d.)	(2)	Y325-202	[B]
✓ 176	Diaphragm (check valve)	(2)	94102	[SP]
✓ 199	Track Gasket	(1)	95666	[B]
✓ 200	Gasket	(1)	95665	[B]
◯ 201	Muffler	(1)	94810	
✓ 232	"O" Ring (1/8" x 1/2" o.d.)	(2)	Y325-202	[B]
233	Adapter Plate	(1)	95761	[P]
236	Nut (M6 x 1 - 6g)	(4)	95924	[SS]
✓ 243	"O" Ring (1/8" x 5/8" o.d.)	(1)	Y325-204	[B]
✓ 244	"O" Ring (1/8" x 7/8" o.d.)	(1)	Y325-208	[B]
★ ✓	Lubriplate FML-2 Grease	(1)	94276	
	Lubriplate Grease Packets (10)		637308	
◯	Items not shown			

★ Fluid Section Service Kit parts, see page 4.

MATERIAL CODE

[B] = Nitrile	[D] = Acetal	[SP] = Santoprene
[Br] = Brass	[I] = Iron	[SS] = Stainless Steel
[C] = Carbon Steel	[P] = Polypropylene	[U] = Polyurethane
[Ck] = Ceramic		

AIR MOTOR SECTION SERVICE

Service is divided into two parts – 1. Pilot Valve, 2. Major Valve.

GENERAL REASSEMBLY NOTES:

- Air Motor Section Service is continued from Fluid Section repair.
- Inspect and replace old parts with new parts as necessary. Look for deep scratches on surfaces, and nicks or cuts in "O" rings.
- Take precautions to prevent cutting "O" rings upon installation.
- Lubricate "O" rings with Lubriplate FML-2 grease.
- Do not over-tighten fasteners, refer to torque specification block on view.
- Re-torque fasteners following restart.
- SERVICE TOOLS – To aid in the installation of (168) "O" rings onto the (167) pilot piston, use tool # 204130-T, available from ARO.

PILOT VALVE DISASSEMBLY

1. A light tap on (118) should expose the opposite (121) sleeve, (167) pilot piston and other parts.
2. Remove (170) sleeve, inspect inner bore of sleeve for damage.

PILOT VALVE REASSEMBLY

1. Clean and lubricate parts not being replaced from service kit.
2. Install new (171 and 172) "O" rings, replace (170) sleeve.
3. Install new (168) "O" rings and (169) seal - Note the lip direction. Lubricate and replace (167).
4. Reassemble remaining parts, replace (173 and 174) "O" rings.

MAJOR VALVE DISASSEMBLY

1. Remove (135) valve block and (233) adapter plate, exposing (132 and 166) gaskets, (232) "O" ring and (176) checks.
2. Remove (233) adapter plate, releasing (140) valve insert, (141) valve plate, (199 and 200) gaskets and (232, 243 and 244) "O" rings.
3. Remove (136) end cap and (137) "O" ring, releasing (111) spool.

MAJOR VALVE REASSEMBLY

1. Install new (138 and 139) "U" cups on (111) spool – **LIPS MUST FACE EACH OTHER.**
2. Insert (111) spool into (135) valve block.
3. Install (137) "O" ring on (136) end cap and assemble end cap to (135) valve block, securing with (107) end plates and (105) screws.
4. Install (140) valve insert and (141) valve plate into (135) valve block. NOTE: Assemble (140) valve insert with "dished" side toward (141) valve plate. Assemble (141) valve plate with 2 identification dots toward (199 and 200) gaskets.
5. Assemble (232, 243 and 244) "O" rings, (199 and 200) gaskets and (233) adapter plate to (135) valve block.
6. Assemble (132 and 166) gaskets, (176) checks and (232) "O" ring to (101) body.
7. Assemble (135) valve block and components to (101) body, securing with (134) screws.

☐ "Smart Parts" Keep these items on hand in addition to the service kits for fast repair and reduction of down time.

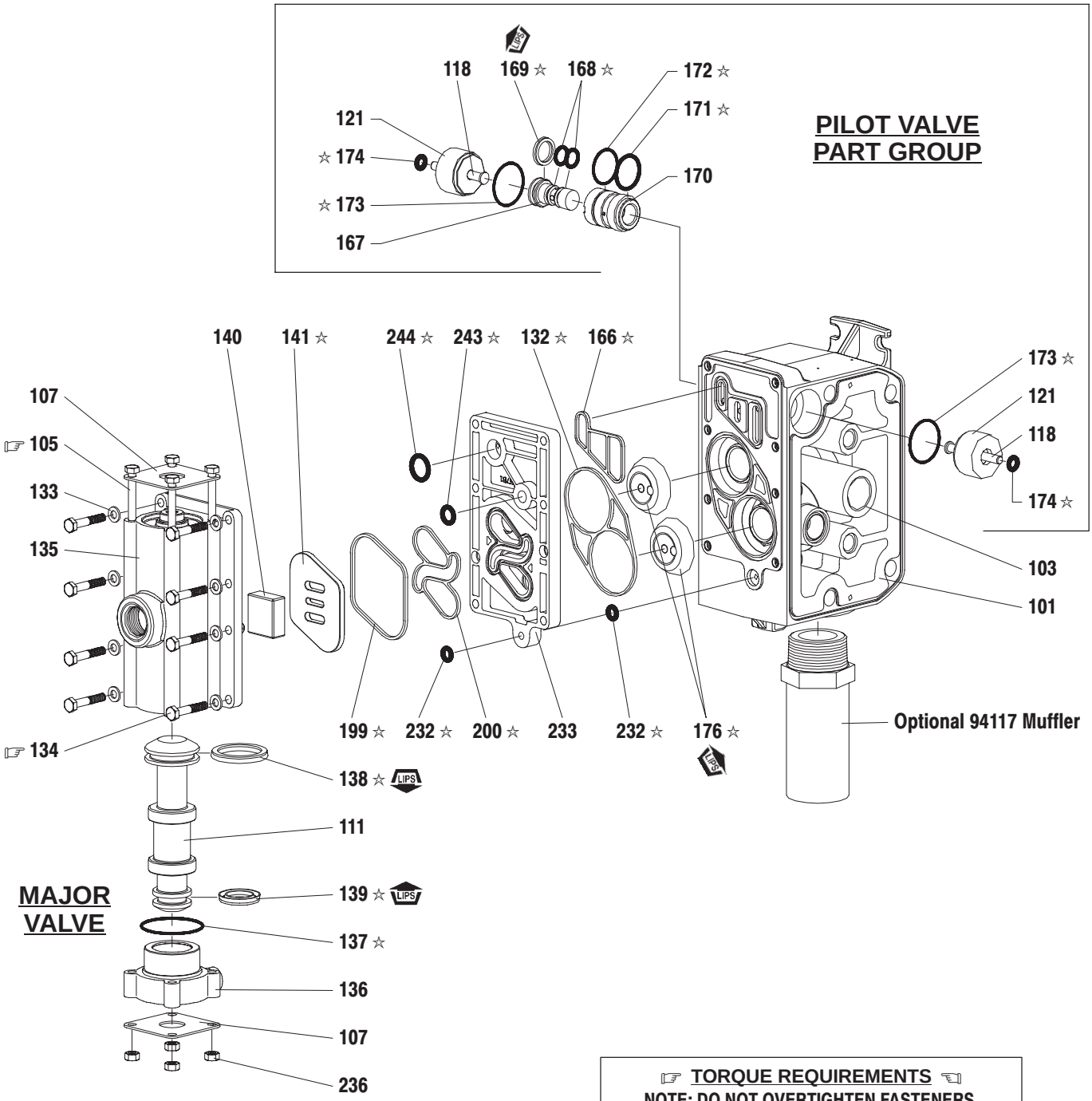

☞ **TORQUE REQUIREMENTS** ☜

NOTE: DO NOT OVERTIGHTEN FASTENERS.
ALL FASTENERS ARE METRIC.

Torque (105) Screw to 35 - 40 in. lbs (4.0 - 4.5 Nm).
Torque (134) Screw to 35 - 40 in. lbs (4.0 - 4.5 Nm).

LUBRICATION / SEALANTS

☆ **Apply Lubriplate FML-2 grease to "O" rings, "U" Cups & mating parts.**

A 637374 Replacement Major Valve Service Assembly is available separately, which includes the following:
105 (4), 107 (2), 111, 132, 135, 136, 137, 138, 139, 140, 141, 166, 176 (2), 199, 200, 232 (2), 233, 236 (4), 243 and 244.

Figure 3

TROUBLE SHOOTING

Product discharged from exhaust outlet.
- Check for diaphragm rupture.
- Check tightness of (14) diaphragm screw.

Air bubbles in product discharge.
- Check connections of suction plumbing.
- Check gaskets between intake manifold and inlet side fluid caps.
- Check tightness of (14) diaphragm screw.

Motor blows air or stalls.
- Check (176) check valve for damage or wear.
- Check for restrictions in valve / exhaust.

Low output volume, erratic flow, or no flow.
- Check air supply.
- Check for plugged outlet hose.
- Check for kinked (restrictive) outlet material hose.
- Check for kinked (restrictive) or collapsed inlet material hose.
- Check for pump cavitation - suction pipe should be sized at least as large as the inlet thread diameter of the pump for proper flow if high viscosity fluids are being pumped. Suction hose must be a non-collapsing type, capable of pulling a high vacuum.
- Check all joints on the inlet manifolds and suction connections. These must be air tight.
- Inspect the pump for solid objects logged in the diaphragm chamber or the seat area.

DIMENSIONAL DATA

(Dimensions shown are for reference only, they are displayed in inches and millimeters (mm).

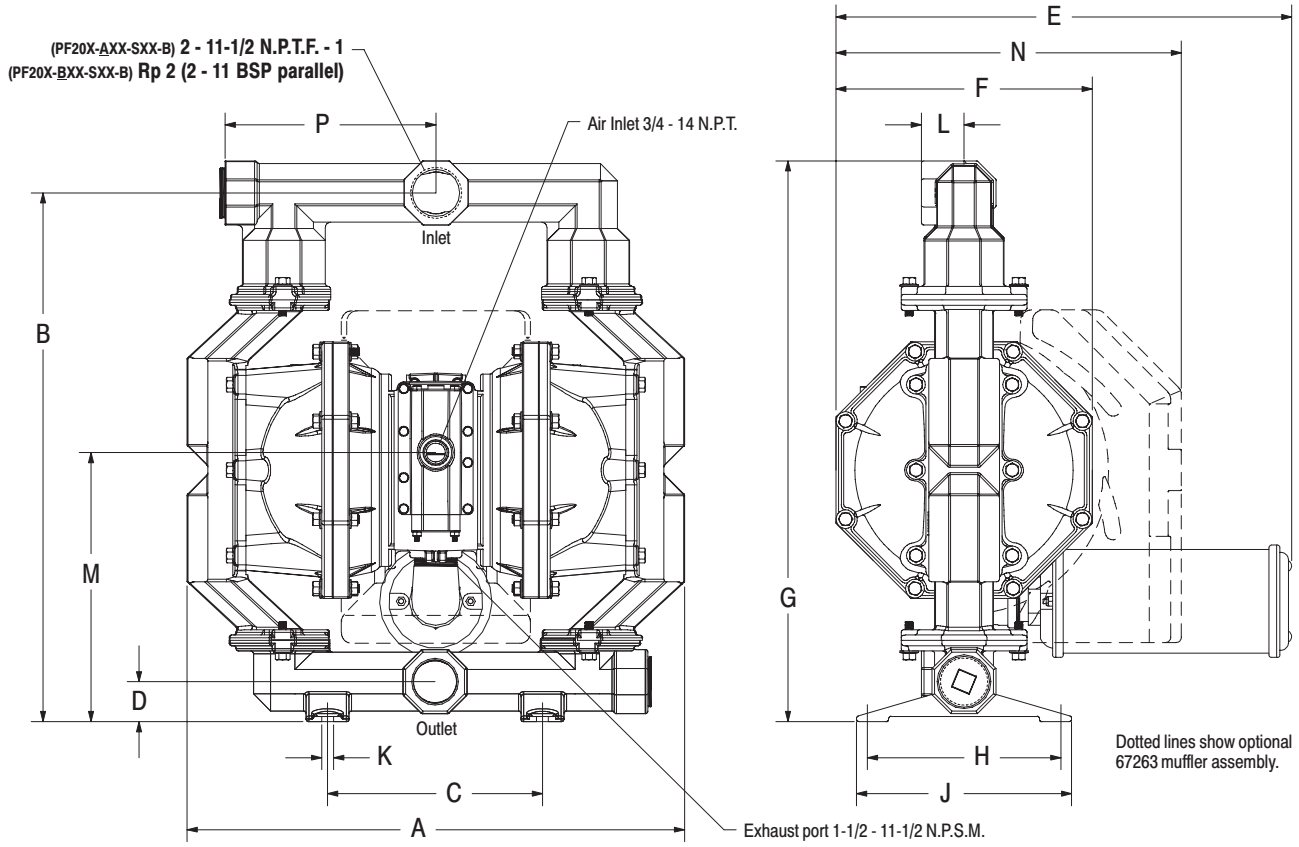

DIMENSIONS

A - 23-9/32" (591.3 mm)	E - 21-11/32" (541.9 mm)	J - 10-1/16" (255.6 mm)	N - 16-3/16" (410.8 mm)
B - 24-3/4" (628.7 mm)	F - 12" (304.8 mm)	K - 9/16" (14.3 mm)	P - see below
C - 10-1/16" (255.6 mm)	G - 26-1/4" (666.8 mm)	L - see below	
D - see below	H - 9-1/16" (230.2 mm)	M - see below	

	"D"	"L"	"M"	"P"
PF20X-XCX-SXX-B	1-7/8" (47.6 mm)	2" (50.8 mm)	12-19/32" (319.9 mm)	9-7/8" (250.7 mm)
PF20X-XSX-SXX-B	2-1/2" (63.5 mm)	2-3/32" (53.0 mm)	13-1/4" (336.6 mm)	-------

Figure 4