OPERATOR'S MANUAL AD25A-X-X

INCLUDING: OPERATION, INSTALLATION & MAINTENANCE

RELEASED: 4-22-05
REVISED: 5-31-05
(REV. 02)

1" DIAPHRAGM PUMP

1:1 RATIO (METALLIC)

READ THIS MANUAL CAREFULLY BEFORE INSTALLING, OPERATING OR SERVICING THIS EQUIPMENT.

It is the responsibility of the employer to place this information in the hands of the operator. Keep for future reference.

SERVICE KITS

Refer to "Model Description Chart" to match the pump material options.
637436 for air section repair (see page 6).
637425-XX for fluid section repair (see page 4).

PUMP DATA

Models . . . . . see "Model Description Chart" for "-XXX"
Pump Type . . . . . Metallic Air Operated Double Diaphragm
Material . . . . . see "Model Description Chart"
Weight . . . AD25A-XAX-XXX . . . . . 22.0 lbs (10.0 kg)
AD25A-XCX-XXX . . . . . 35.3 lbs (16.0 kg)
AD25A-XSX-XXX . . . . . 37.9 lbs (17.2 kg)
Maximum Air Inlet Pressure . . . . . 120 p.s.i. (8.3 bar)
Maximum Material Inlet Pressure . . . . . 10 p.s.i. (0.69 bar)
Maximum Outlet Pressure . . . . . 120 p.s.i. (8.3 bar)
Maximum Flow Rate (flooded inlet) . . . 35 g.p.m. (133 l.p.m.)
Maximum Particle Size . . . . . 1/8" dia. (3.2 mm)
Maximum Temperature Limits (diaphragm / ball / seat material)
E.P.R. / EPDM . . . . . -60° to 280° F (-51° to 138° C)
Hytrel® . . . . . -20° to 150° F (-29° to 66° C)
Polypropylene . . . . . 35° to 150° F (2° to 66° C)
Santoprene® . . . . . -40° to 225° F (-40° to 107° C)
T.F.E. (Teflon®) . . . . . 40° to 225° F (4° to 107° C)
Viton® . . . . . -40° to 350° F (-40° to 177° C)
Dimensional Data . . . . . see page 8
Noise Level @ 70 p.s.i., 60 c.p.m. . . . . . 64.5 db(A)*

* The pump sound pressure levels published here have been updated to an Equivalent Continuous Sound Level (L_{Aeq}) to meet the intent of ANSI S1.13-1971, CAGI-PNEUROP S5.1 using four microphone locations.

NOTICE: All possible options are shown in the chart. However, certain combinations may not be recommended, consult a representative or the factory if you have questions concerning availability.

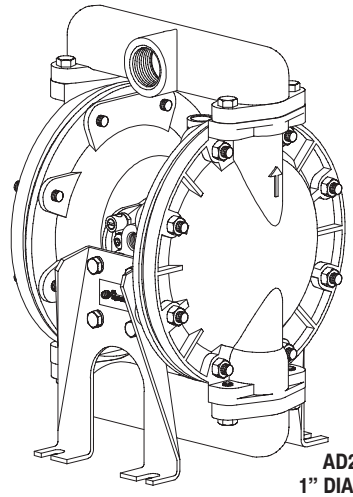

AD25A-XXX-XXX
1" DIAPHRAGM PUMP

MODEL DESCRIPTION CHART

AD25 A - X X X - X X X

CENTER SECTION MATERIAL
A - Aluminum

THREAD
A - 1" N.P.T.F. - 1
B - Rp 1 - 11 BS

FLUID CAPS & MANIFOLD MATERIAL
A - Aluminum
C - Cast iron
S - Stainless Steel

HARDWARE MATERIAL
P - Carbon Steel
S - Stainless Steel

SEAT MATERIAL
F - Aluminum
P - Polypropylene
S - 316 Stainless Steel

BALL MATERIAL
A - Santoprene
C - Hytrel
T - Teflon

DIAPHRAGM MATERIAL
A - Santoprene
C - Hytrel
T - Teflon

FLUID SECTION SERVICE KIT SELECTION AD25A - XXX - X X X

EXAMPLE: MODEL # AD25A-ASS-SAA
FLUID SECTION SERVICE KIT # 637425-AA

637425 - X X
Ball — Diaphragm

INGERSOLL-RAND COMPANY
P.O. BOX 151 • ONE ARO CENTER • BRYAN, OHIO 43506-0151
(800) 276-4658 • FAX (800) 266-7016
©2005
CCN 15242605

ARO® Ingersoll-Rand

OPERATING AND SAFETY PRECAUTIONS

READ, UNDERSTAND, AND FOLLOW THIS INFORMATION TO AVOID INJURY AND PROPERTY DAMAGE.

EXCESSIVE AIR PRESSURE
STATIC SPARK

HAZARDOUS MATERIALS
HAZARDOUS PRESSURE

⚠WARNING EXCESSIVE AIR PRESSURE. Can cause personal injury, pump damage or property damage.

- Do not exceed the maximum inlet air pressure as stated on the pump model plate.
- Be sure material hoses and other components are able to withstand fluid pressures developed by this pump. Check all hoses for damage or wear. Be certain dispensing device is clean and in proper working condition.

⚠WARNING STATIC SPARK. Can cause explosion resulting in severe injury or death. Ground pump and pumping system.

- Sparks can ignite flammable material and vapors.
- The pumping system and object being sprayed must be grounded when it is pumping, flushing, recirculating or spraying flammable materials such as paints, solvents, lacquers, etc. or used in a location where surrounding atmosphere is conducive to spontaneous combustion. Ground the dispensing valve or device, containers, hoses and any object to which material is being pumped.
- Use the pump grounding screw terminal provided. Use ARO part no. 66885-1 ground kit or connect a suitable ground wire (12 ga. min.) to a good earth ground source.
- Secure pump, connections and all contact points to avoid vibration and generation of contact or static spark.
- Consult local building codes and electrical codes for specific grounding requirements.
- After grounding, periodically verify continuity of electrical path to ground. Test with an ohmmeter from each component (e.g., hoses, pump, clamps, container, spray gun, etc.) to ground to insure continuity. Ohmmeter should show 0.1 ohms or less.
- Submerse the outlet hose end, dispensing valve or device in the material being dispensed if possible. (Avoid free streaming of material being dispensed.)
- Use hoses incorporating a static wire.
- Use proper ventilation.
- Keep inflammables away from heat, open flames and sparks.
- Keep containers closed when not in use.

⚠WARNING Pump exhaust may contain contaminants. Can cause severe injury. Pipe exhaust away from work area and personnel.

- In the event of a diaphragm rupture material can be forced out of the air exhaust muffler.
- Pipe the exhaust to a safe remote location when pumping hazardous or inflammable materials.
- Use a grounded 3/8" minimum i.d. hose between the pump and the muffler.

⚠WARNING HAZARDOUS PRESSURE. Can result in serious injury or property damage. Do not service or clean pump, hoses or dispensing valve while the system is pressurized.

- Disconnect air supply line and relieve pressure from the system by opening dispensing valve or device and / or carefully and slowly loosening and removing outlet hose or piping from pump.

⚠WARNING HAZARDOUS MATERIALS. Can cause serious injury or property damage. Do not attempt to return a pump to the factory or service center that contains hazardous material. Safe handling practices must comply with local and national laws and safety code requirements.

- Obtain Material Safety Data Sheets on all materials from the supplier for proper handling instructions.

⚠WARNING EXPLOSION HAZARD. Models containing aluminum wetted parts cannot be used with III.-Trichloroethane, Methylene Chloride or other Halogenated Hydrocarbon solvents which may react and explode.

- Check pump motor section, fluid caps, manifolds and all wetted parts to assure compatibility before using with solvents of this type.

⚠CAUTION Verify the chemical compatibility of the pump wetted parts and the substance being pumped, flushed or recirculated. Chemical compatibility may change with temperature and concentration of the chemical(s) within the substances being pumped, flushed or circulated. For specific fluid compatibility, consult the chemical manufacturer.

⚠CAUTION Maximum temperatures are based on mechanical stress only. Certain chemicals will significantly reduce maximum safe operating temperature. Consult the chemical manufacturer for chemical compatibility and temperature limits. Refer to PUMP DATA on page 1 of this manual.

⚠CAUTION Be certain all operators of this equipment have been trained for safe working practices, understand it's limitations, and wear safety goggles / equipment when required.

⚠CAUTION Do not use the pump for the structural support of the piping system. Be certain the system components are properly supported to prevent stress on the pump parts.

- Suction and discharge connections should be flexible connections (such as hose), not rigid piped, and should be compatible with the substance being pumped.

⚠CAUTION Prevent unnecessary damage to the pump. Do not allow pump to operate when out of material for long periods of time.

- Disconnect air line from pump when system sits idle for long periods of time.

⚠CAUTION Use only genuine ARO replacement parts to assure compatible pressure rating and longest service life.

NOTICE Replacement warning labels are available upon request: "Static Spark PN \ 93616-1 & Diaphragm Rupture PN \ 93122."

⚠WARNING	=	Hazards or unsafe practices which could result in severe personal injury, death or substantial property damage.
⚠CAUTION	=	Hazards or unsafe practices which could result in minor personal injury, product or property damage.
NOTICE	=	Important installation, operation or maintenance information.

GENERAL DESCRIPTION

The ARO diaphragm pump offers high volume delivery even at low air pressure and a broad range of material compatibility options available. Refer to the model and option chart. ARO pumps feature stall resistant design, modular air motor / fluid sections.

Air operated double diaphragm pumps utilize a pressure differential in the air chambers to alternately create suction and positive fluid pressure in the fluid chambers, ball checks insure a positive flow of fluid.

Pump cycling will begin as air pressure is applied and it will continue to pump and keep up with the demand. It will build and maintain line pressure and will stop cycling once maximum line pressure is reached (dispensing device closed) and will resume pumping as needed.

AIR AND LUBE REQUIREMENTS

⚠WARNING EXCESSIVE AIR PRESSURE. Can cause pump damage, personal injury or property damage.

- A filter capable of filtering out particles larger than 50 microns should be used on the air supply. There is no lubrication required other than the "O" ring lubricant which is applied during assembly or repair.
- If lubricated air is present, make sure that it is compatible with the Nitrile "O" rings in the air motor section of the pump.

OPERATING INSTRUCTIONS

- Always flush the pump with a solvent compatible with the material being pumped if the material being pumped is subject to "setting up" when not in use for a period of time.
- Disconnect the air supply from the pump if it is to be inactive for a few hours.
- The outlet material volume is governed not only by the air supply but also by the material supply available at the inlet. The material supply tubing should not be too small or restrictive. Be sure not to use hose which might collapse.
- When the diaphragm pump is used in a forced-feed (flooded inlet) situation, it is recommended that a "Check Valve" be installed at the air inlet.
- Secure the diaphragm pump legs to a suitable surface to insure against damage by vibration.

MAINTENANCE

Refer to the part views and descriptions as provided on page 4 through 7 for parts identification and Service Kit information.

- Certain ARO "Smart Parts" are indicated which should be available for fast repair and reduction of down time.
- Service kits are divided to service two separate diaphragm pump functions: 1. AIR SECTION, 2. FLUID SECTION. The FLUID SECTION is divided further to match typical part MATERIAL OPTIONS.
- Provide a clean work surface to protect sensitive internal moving parts from contamination from dirt and foreign matter during service disassembly and reassembly.
- Keep good records of service activity and include pump in preventive maintenance program.
- Before disassembling, empty captured material in the outlet manifold by turning the pump upside down to drain material from the pump.

FLUID SECTION DISASSEMBLY

1. Remove top manifold(s).
2. Remove (22) balls, (19) "O" rings, (21) seats.
3. Remove (15) fluid caps.

NOTE:Only Teflon diaphragm models use a primary diaphragm (7) and a backup diaphragm (8). Refer to the auxiliary view in the Fluid Section illustration.

4. Remove the (6) nut, (7) or (7 / 8) diaphragms and (5) washers.
5. Remove (3) "O" rings.

NOTE: Do not scratch or mar the surface of (1) diaphragm rod.

FLUID SECTION REASSEMBLY

- Reassemble in reverse order.
- Clean and inspect all parts. Replace worn or damaged parts with new parts as required.
- Lubricate (1) diaphragm rod and (2) "O" ring with Key-Lube® grease.
- Use ARO pn / 98930-T bullet (installation tool) to aid in installation of (2) "O" ring on (1) diaphragm rod.
- Be certain (7) or (7 / 8) diaphragm(s) align properly with (15) fluid caps before making final torque adjustments on bolt and nuts to avoid twisting the diaphragm.
- For models with Teflon diaphragms: Item (8) Santoprene diaphragm is installed with the side marked "AIR SIDE" towards the pump center body. Install the Teflon diaphragm with the side marked "FLUID SIDE" towards the fluid cap.
- Re-check torque settings after pump has been re-started and run a while.

• Viton®, Teflon® and Hytrel® are trademarks of the DuPont Company, • Santoprene® is a registered trademark of Monsanto Company, licensed to Advanced Elastomer Systems, L.P. • Key-Lube® is a registered trademark of Key Industries

FLUID SECTION SERVICE KITS

★ KITS INCLUDE: BALLS (See BALL Option, refer to -XX in chart below), DIAPHRAGMS (See DIAPHRAGM Option, refer to -XX in chart below), plus "O" Ring items: 2, 3, 19 and 93706-1 Key-Lube grease.

SEAT OPTIONS AD25A-XXX-XXX "21"			
-XXX	Seat	Qty	[Mtl]
-FXX	92008	(4)	[A]
-PXX	92926	(4)	[P]
-SXX	90428	(4)	[SS]

BALL OPTIONS AD25A-XXX-XXX ★ "22" (1" dia.)			
-XXX	Ball	Qty	[Mtl]
-XAX	90532-A	(4)	[SP]
-XCX	90532-C	(4)	[H]
-XTX	90532-4	(4)	[T]

MATERIAL CODE

[A] =	Aluminum	[H] =	Hytrel
[B] =	Nitrile	[P] =	Polypropylene
[C] =	Carbon Steel	[SP] =	Santoprene
[CI] =	Cast Iron	[SS] =	Stainless Steel
[Co] =	Copper	[T] =	Teflon
[E] =	E.P.R.	[V] =	Viton

DIAPHRAGM OPTIONS AD25A-XXX-XXX

-XXX	★ Service Kit -XX = (Ball) -XX = (Diaphragm)	★ "7" Diaphragm	Qty	[Mtl]	★ "8" Diaphragm	Qty	[Mtl]	★ "3" "O" Ring (1/16" x 5/8" o.d.)	Qty	[Mtl]	★ "19" "O" Ring (3/32" x 1-9/16" o.d.)	Qty	[Mtl]
-XXA	637425-XA	90533-B	(2)	[SP]	-----	---	---	Y328-14	(4)	[T]	90534	(4)	[E]
-XXC	637425-XC	90533-9	(2)	[H]	-----	---	---	Y328-14	(4)	[T]	Y327-126	(4)	[V]
-XXT	637425-XT	93459-4	(2)	[T]	92973-B	(2)	[SP]	Y328-14	(4)	[T]	Y328-126	(4)	[T]

MANIFOLD / FLUID CAP MATERIAL OPTIONS AD25A-XXX-XXX

			ALUMINUM				CAST IRON				STAINLESS STEEL			
			AD25A-AAX- N.P.T.		AD25A-BAX- BSP		AD25A-ACX- N.P.T.		AD25A-BCX- BSP		AD25A-ASX- N.P.T.		AD25A-BSX- BSP	
Item	Description (size)	Qty	Part No.	[Mtl]	Part No.	[Mtl]	Part No.	[Mtl]	Part No.	[Mtl]	Part No.	[Mtl]	Part No.	[Mtl]
□ 6	Washer (fluid side)	(2)	93441-2	[C]	93441-2	[C]	93441-2	[C]	93441-2	[C]	93441-1	[SS]	93441-1	[SS]
15	Fluid Cap	(2)	94945	[A]	94945	[A]	94277	[CI]	94277	[CI]	91045	[SS]	91045	[SS]
16	Manifold	(2)	92001	[A]	92001-1	[A]	94278	[CI]	94278-1	[CI]	91044	[SS]	91044-1	[SS]

HARDWARE OPTIONS AD25A-XXX-XXX

			Carbon Steel AD25A-XXP-XXX		Stainless Steel AD25A-XXS-XXX	
Item	Description (size)	Qty	Part No.	[Mtl]	Part No.	[Mtl]
26	Bolt (5/16" - 18 x 1")	(8)	Y6-55-C	[C]	Y6-55-T	[SS]
29	Nut (5/16" - 18)	(16)	Y12-5-C	[C]	Y12-5-S	[SS]

COMMON PARTS

Item	Description (size)	Qty	Part No.	[Mtl]	Item	Description (size)	Qty	Part No.	[Mtl]
□ 1	Rod	(1)	98724-1	[C]	9	Washer (0.505" i.d.)	(2)	93189-1	[SS]
★ 2	"O" Ring (3/32" x 3/4" o.d.) ☆	(1)	Y330-113	[B]	14	Screw (1/2" - 20 x 1")	(2)	Y5-85-T	[SS]
5	Washer - (air side) (3-5/8" o.d.)	(2)	93441-2	[C]	43	Ground Lug (see page 7)	(1)	93004	[Co]

Service Note: Part No. 98930-T installation tool is available separately for use with items 1 and 2.

□ "Smart Parts" keep these items on hand in addition to the Service Kits for fast repair and reduction of down time.

COLOR CODE

MATERIAL	DIAPHRAGM COLOR	BALL COLOR
Hytrel	Cream	Cream
Santoprene	Cream*	Cream
Santoprene (Backup)	Green	N/A
T.F.E. (Teflon)	White	White

* See item 8 in inset below.

☞ TORQUE REQUIREMENTS ☜

NOTE: DO NOT OVERTIGHTEN FASTENERS

(14) Diaphragm bolt 25 - 30 ft lbs (33.9 - 40.7 Nm), apply Loctite 271 to threads.
(26) Bolts and (29) nuts 120 - 140 in. lbs (13.6 - 15.8 Nm).

LUBRICATION / SEALANTS

☆ Apply Key-Lube to all "O" rings, "U" Cups & mating parts.
Apply anti-seize compound to threads and bolt and nut flange heads which contact pump case when using stainless steel fasteners.

○ NOTE: Radius edge of parts (5 and 6) is against diaphragm.

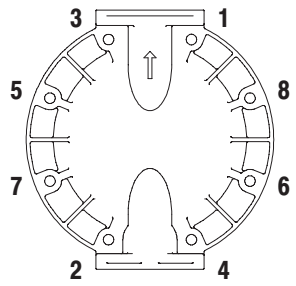

Torque Sequence

FOR THE AIR MOTOR SECTION SEE PAGES 6 & 7

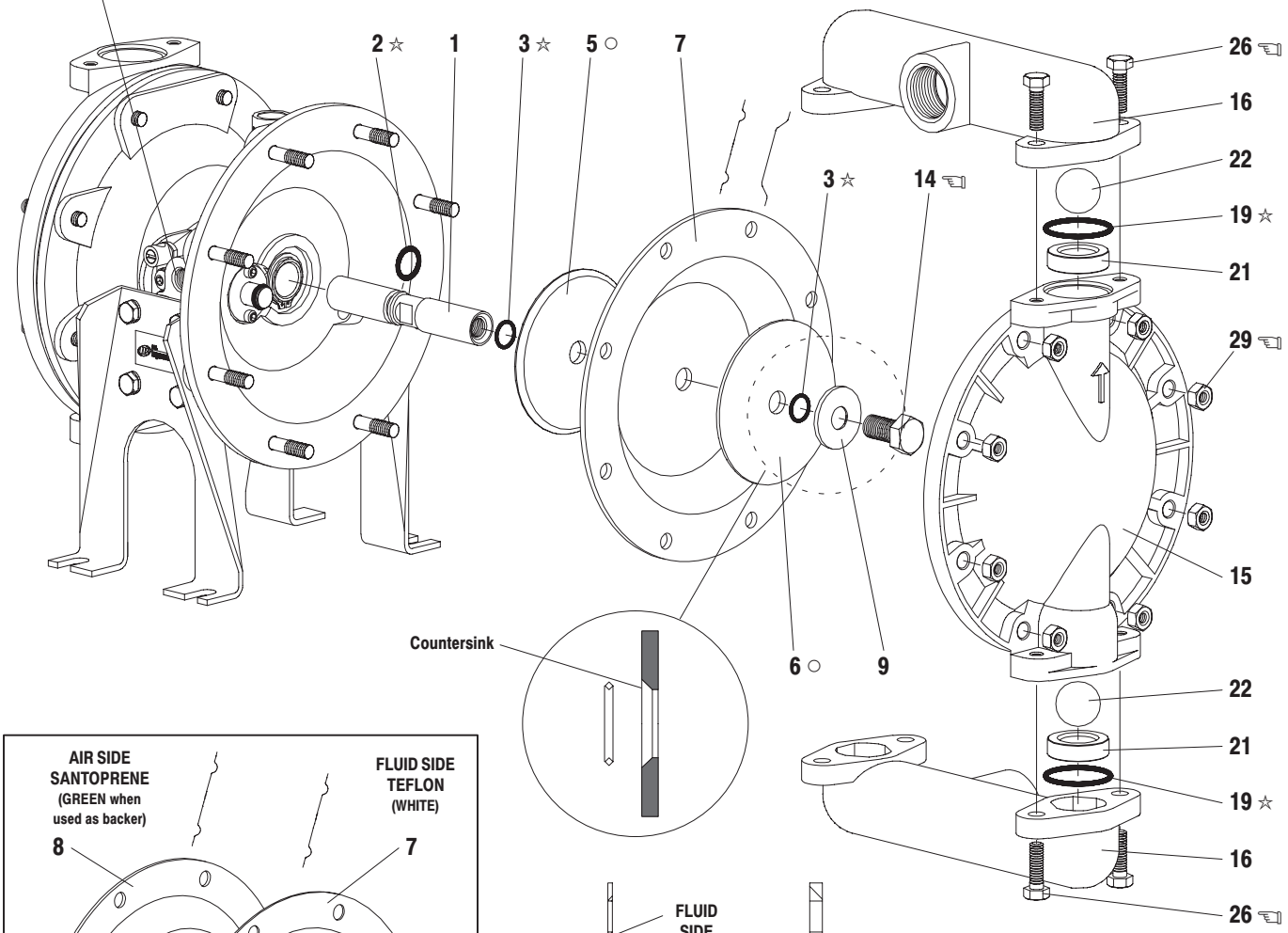

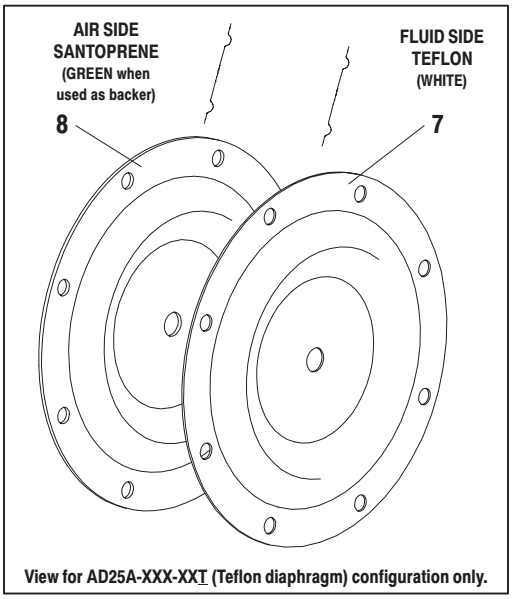

View for AD25A-XXX-XXT (Teflon diaphragm) configuration only.

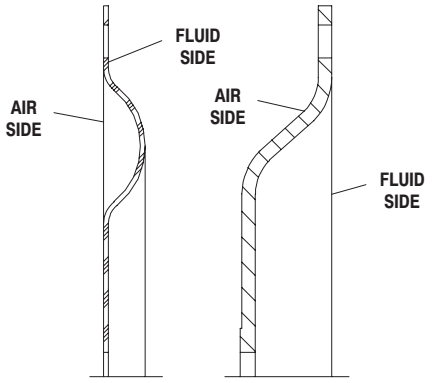

CROSS SECTION VIEW OF DIAPHRAGMS

Figure 1

PARTS LIST / AD25A-X-X AIR MOTOR SECTION

✓ **Indicates parts included in 637436 Air Section Service Kit.**
SERVICE KIT NOTE: Service Kit 637436 is a general repair kit for all 1" and larger ARO diaphragm pump air motors. It contains extra "O" Rings and extra parts that may not be needed to service this model.

Item	Description (size)	Qty	Part No.	[Mtl]
101	Motor Body	(1)	94743	[A]
✓102	"O" Ring (1/16" x 1" o.d.)	(2)	Y325-20	[B]
□ 103	Sleeve	(1)	94527	[D]
✓104	Retaining Ring, TruArc (0.925" i.d.)	(2)	Y145-25	[C]
105	Screw/Wshr (1/4"-20 x 5/8") (AD25A-XXP-)	(8)	93860	[C]
	Cap Screw (1/4"-20 x 5/8") (AD25A-XXS-)	(8)	Y6-42-T	[SS]
106	Lockwasher (1/4") (AD25A-XXS-)	(8)	Y14-416-T	[SS]
107	Leg (AD25A-XXP-)	(2)	92003	[C]
	(AD25A-XXS-)	(2)	92003-1	[SS]
✓108	Gasket (with notch)	(1)	92878	[B/Ny]
□ 109	Piston	(1)	92011	[D]
✓110	"U" Cup (3/16" x 1-3/8" o.d.)	(1)	Y186-51	[B]
□ 111	Spool	(1)	92005	[A]
□ 112	Washer (1.557" o.d.)	(5)	92877	[Z]
✓113	"O" Ring (small) (1/8" x 1-1/4" o.d.)	(5)	Y325-214	[B]
✓114	"O" Ring (large) (3/32" x 1-9/16" o.d.)	(6)	Y325-126	[B]
□ 115	Spacer	(4)	92876	[Z]

Item	Description (size)	Qty	Part No.	[Mtl]
□ 116	Spacer	(1)	92006	[Z]
✓117	Gasket	(1)	92004	[B/Ny]
118	Pilot Rod	(1)	93309-1	[C]
✓119	"O" Ring (1/8" x 3/4" o.d.)	(4)	93075	[U]
120	Spacer	(3)	115959	[Z]
121	Sleeve Bushing	(2)	98723-1	[Bz]
✓122	"O" Ring (3/32" x 9/16" o.d.)	(2)	94820	[U]
✓123	Screw (#8 - 32 x 3/8")	(4)	Y154-41	[C]
124	Stud (5/16" - 18 x 1-3/4") (AD25A-XXP-)	(16)	92866	[C]
	(5/16" - 18 x 1-3/4") (AD25A-XXS-)	(16)	92866-1	[SS]
128	Pipe Plug (1/8 - 27 N.P.T. x 1/4")	(1)	Y227-2-L	[C]
133	Lockwasher (1/4")	(1)	Y14-416-T	[SS]
197	Button Head Screw (1/4" - 20 x 1/4")	(2)	94987	[SS]
198	Button Head Screw (1/4" - 20 x 3/8")	(1)	94987-1	[SS]
201	Muffler	(1)	93110	[C]
✓	Key-Lube "O" Ring Lubricant	(1)	93706-1	
	10 Pak of Key-Lube		637175	

AIR MOTOR SECTION SERVICE

Service is divided into two parts – 1. Pilot Valve, 2. Major Valve.

GENERAL REASSEMBLY NOTES:

- Air Motor Section Service is continued from Fluid Section repair.
- Inspect and replace old parts with new parts as necessary. Look for deep scratches on metallic surfaces, and nicks or cuts in "O" rings.
- Take precautions to prevent cutting "O" rings upon installation.
- Lubricate "O" rings with Key-Lube grease.
- Do not over-tighten fasteners, refer to torque specification block on view.
- Re-torque fasteners following restart.

PILOT VALVE DISASSEMBLY

1. Remove (104) retaining ring.
2. Remove (123) screws and (122) "O" rings.
3. Remove (118) piston rod, (121) sleeve bushing, (119) "O" rings and (120) spacers from the (101) motor body.
4. Remove (103) sleeve and (102) "O" rings.

PILOT VALVE REASSEMBLY

1. Replace two (102) "O" rings if worn or damaged and reinstall (103) sleeve.
2. Install one of the (121) sleeve bushings, (119) "O" rings, (120) spacers and the remaining (121) bushing.
3. Carefully push (118) pilot rod into bushings etc. and retain on each end with the two (122) "O" rings, retain with (123) screws.
4. Replace (104) retaining rings.

✓ Parts Y145-26 (1.156" i.d.) (Qty 2) Retaining Rings and Y325-24 "O" Rings (Qty 2) are included in the Service Kit for the repair of larger pumps.

MATERIAL CODE

[A] = Aluminum	[C] = Carbon Steel	[U] = Polyurethane
[B] = Nitrile	[D] = Acetal	[SS] = Stainless Steel
[Bz] = Bronze	[Ny] = Nylon	[Z] = Zinc

MAJOR VALVE DISASSEMBLY

1. Remove (107) plate (or leg depending on model), (108 and 117) gaskets.
2. On the side opposite the air inlet, push on the inner diameter (111) spool. This will force the (109) piston out. Continue pushing the (111) spool and remove. Check for scratches and gouges.
3. Reach into the air section (exhaust side) and remove (116) spacer, (115) spacers, (113) "O" rings, (114) "O" rings, (112) washers, etc. Check for damaged "O" rings.

MAJOR VALVE REASSEMBLY

1. Replace (112) washer, (114) "O" ring and (113) "O" ring onto (115) spacer and insert etc.
   NOTE: Be careful to orient spacer legs away from blocking internal ports.
2. Lubricate and carefully insert (111) spool.
3. Install (117) gasket and (107).
4. Lubricate and install (110) packing cup and insert (109) piston into (air inlet side) cavity, the (110) packing cup lips should point outward.
5. Install (108) gasket and replace (107).

□ "Smart Parts" Keep these items on hand in addition to the Service Kits for fast repair and reduction of down time.

IMPORTANT
BE CERTAIN TO ORIENT (115) SPACER LEGS AWAY FROM BLOCKING INTERNAL PORTS WHEN REASSEMBLING AIR SECTION.

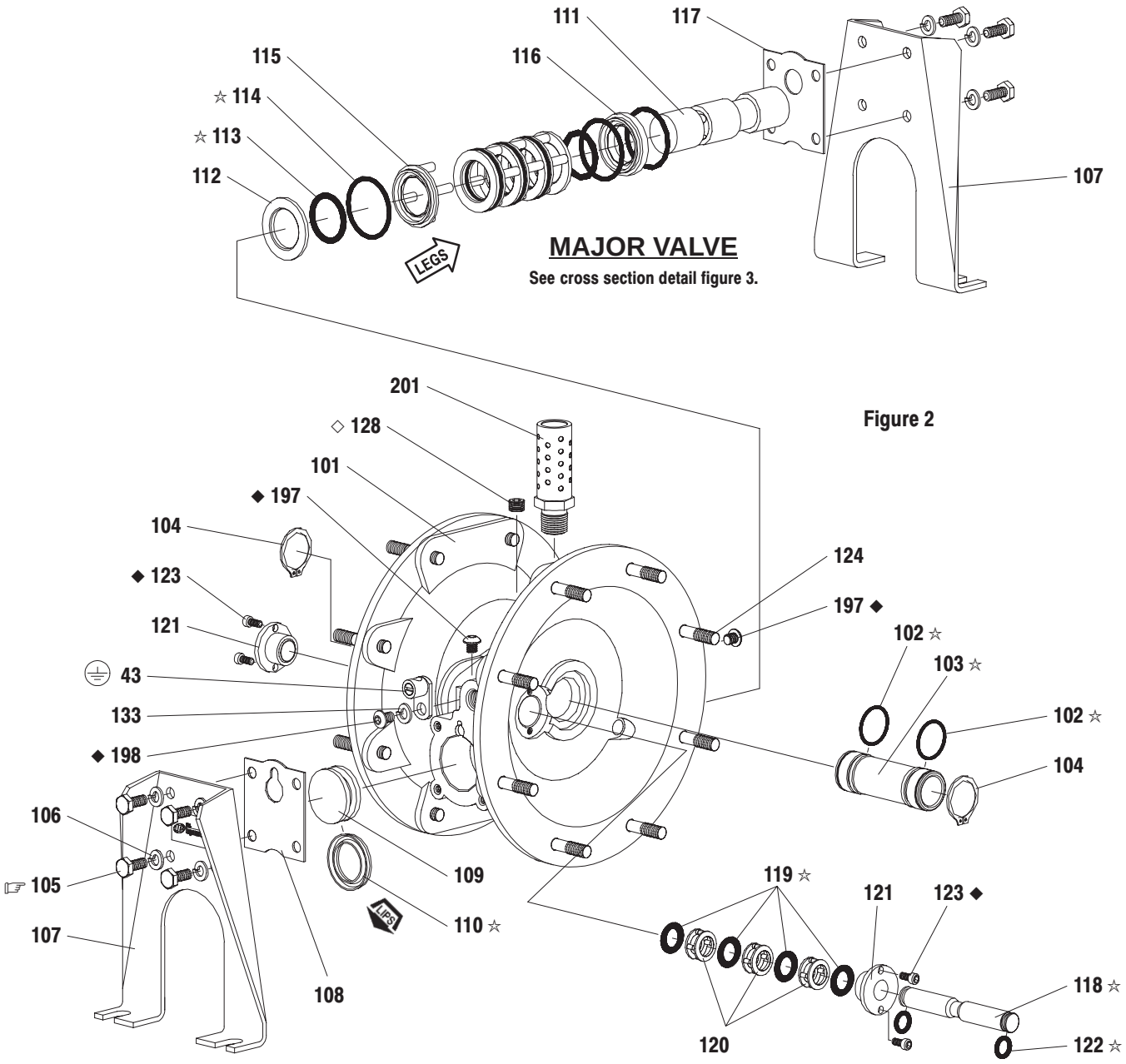

Figure 2

MAJOR VALVE CROSS SECTION DETAIL

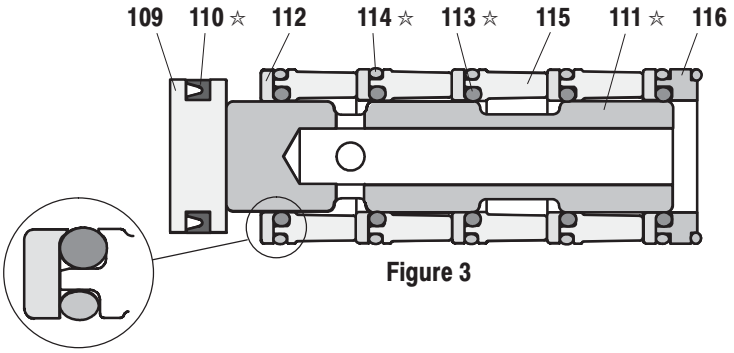

Figure 3

☞ TORQUE REQUIREMENTS ☜

NOTE: DO NOT OVERTIGHTEN FASTENERS

(105) 40 - 50 in. lbs (4.5 - 5.6 Nm).

LUBRICATION / SEALANTS

- ☆ Apply Key-Lube grease to all "O" rings, "U" Cups & mating parts.
- ◆ Apply Loctite 271 to threads.
- ◇ Apply pipe sealant to threads.

TROUBLE SHOOTING

Product discharged from exhaust outlet.
- Check for diaphragm rupture.
- Check tightness of diaphragm nut.

Air bubbles in product discharge.
- Check connections of suction plumbing.
- Check “O” rings between intake manifold and fluid caps.
- Check tightness of diaphragm nut.

Low output volume, erratic flow, or no flow.
- Check air supply.
- Check for plugged outlet hose.
- Check for kinked (restrictive) outlet material hose.
- Check for kinked (restrictive) or collapsed inlet material hose.
- Check for pump cavitation – suction pipe should be sized at least as large as the inlet thread diameter of the pump for proper flow if high viscosity fluids are being pumped. Suction hose must be a non-collapsing type, capable of pulling a high vacuum.
- Check all joints on the inlet manifolds and suction connections. These must be air tight.
- Inspect the pump for solid objects logged in the diaphragm chamber or the seat area.

DIMENSIONAL DATA

(Dimensions shown are for reference only, they are displayed in inches and millimeters (mm).

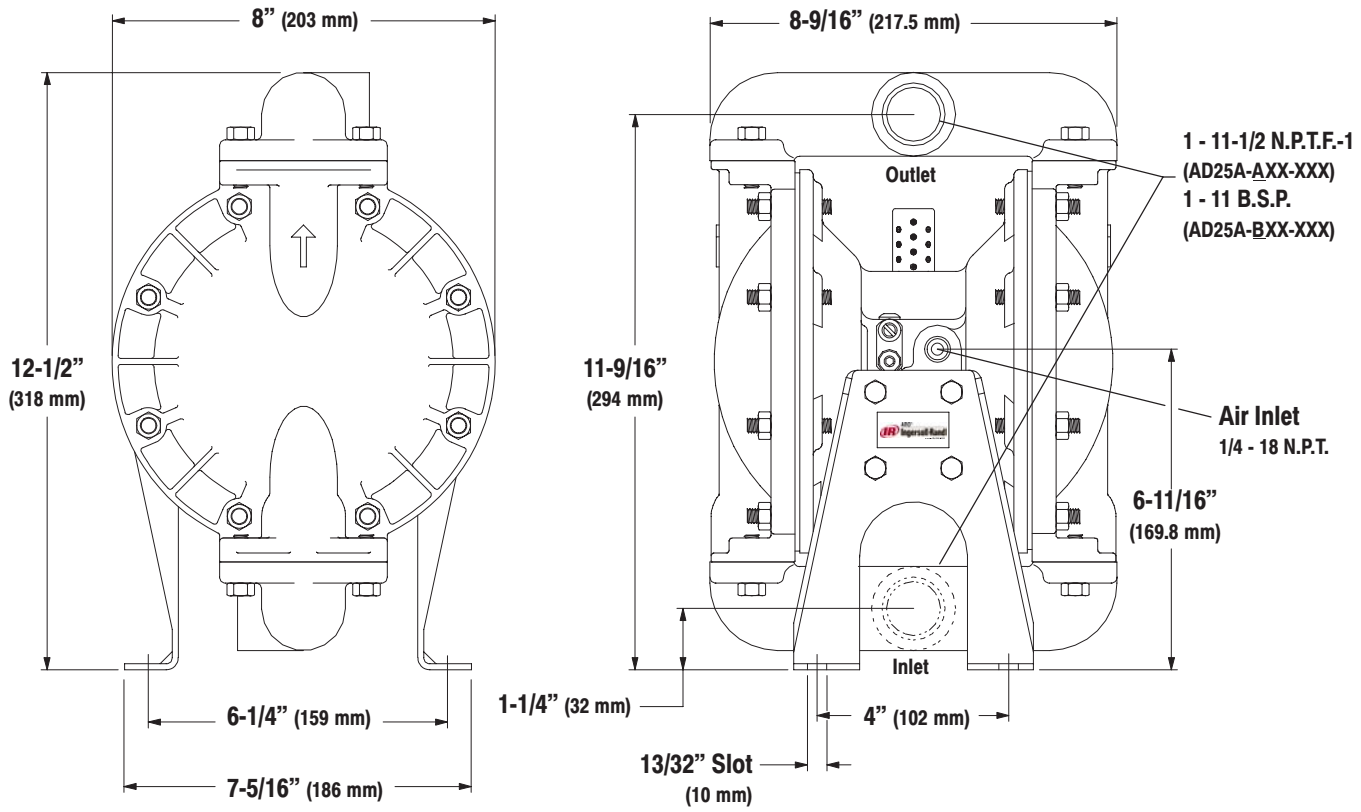

Figure 4